DETAILS AT A GLANCE

Motor location

Ideally locate motor on high side, passive on low side. If due to down-pipe location or power source that the motor must be located on low side it is strongly recommended to use Motor Over option.

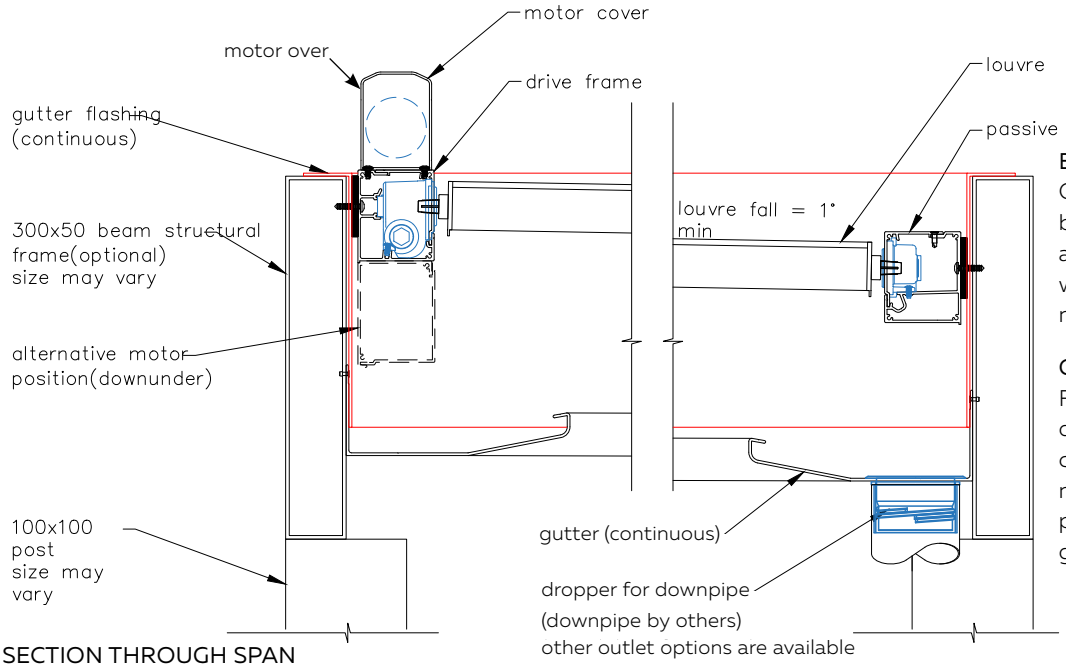

SECTION THROUGH SPAN

BLADE FALL
Opening Roof louvre blades are installed at a minimum pitch of 1° which equals 17mm per metre.

GUTTER FALL
Falls in gutters is determined by location of down-pipe outlet. A minimum fall of 3mm per metre is required for gutters.

IN MOST INSTANCES STRUCTURAL OUTER FRAME IS INSTALLED LEVEL
This allows for ease of other installation options such as Louvre Panels, Slidetec Frameless Glass Sliding Doors or Outdoor Blinds.

Clearance

When fixing under a soffit or overhead obstruction remember to check clearances above drive frame (or passive frame if passive is highest side). Check for motor cover and when opening roof blade is in vertical open position.

As a rule of thumb allow clearance of 100mm for all Opening Roofs excluding the 270 Translucent Roof.

For the 270 Translucent Roof allow clearance of 120mm.

Exact clearances are shown on individual spec sheets in this Design Manual.

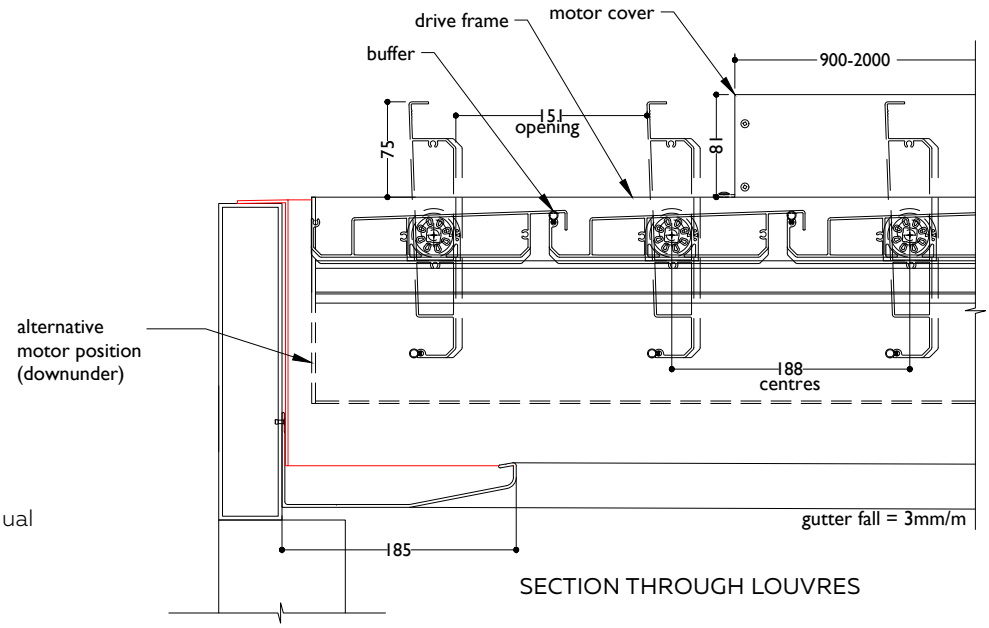

SECTION THROUGH LOUVRES

©Louvretec 2025 - All Rights Reserved. Technical specifications subject to change without notice.