louvretec retract
Retract Roofs

Retract Roofs Gallery & Overview	3.02- 3.05
Range & Configuration options at a glance	3.06 - 3.10
Louvretec 220 retract slimline roof	3.11 - 3.13
Louvretec 220/45 retract alpine* roof *For larger spans, typically alpine and coastal locations	3.14 - 3.17
Pitched Retract Roofs	3.18 - 3.19
Extrusions	3.20
Motors & Motor Location	3.21 - 3.22
Electrical Wiring Locations & Power to Controller	3.23
3 Sided Frame Configurations & Calculations	3.24 - 3.26
4 Sided Frame Configurations & Calculations	3.27 - 3.35
Stack dimensions	3.36
Remote Controller	3.37
Retract After Sales Care	3.38
Safe operation of Louvres	3.39
Warranty information	3.40 - 3.41

©Louvretec 2025 – All Rights Reserved. Technical specifications subject to change without notice.

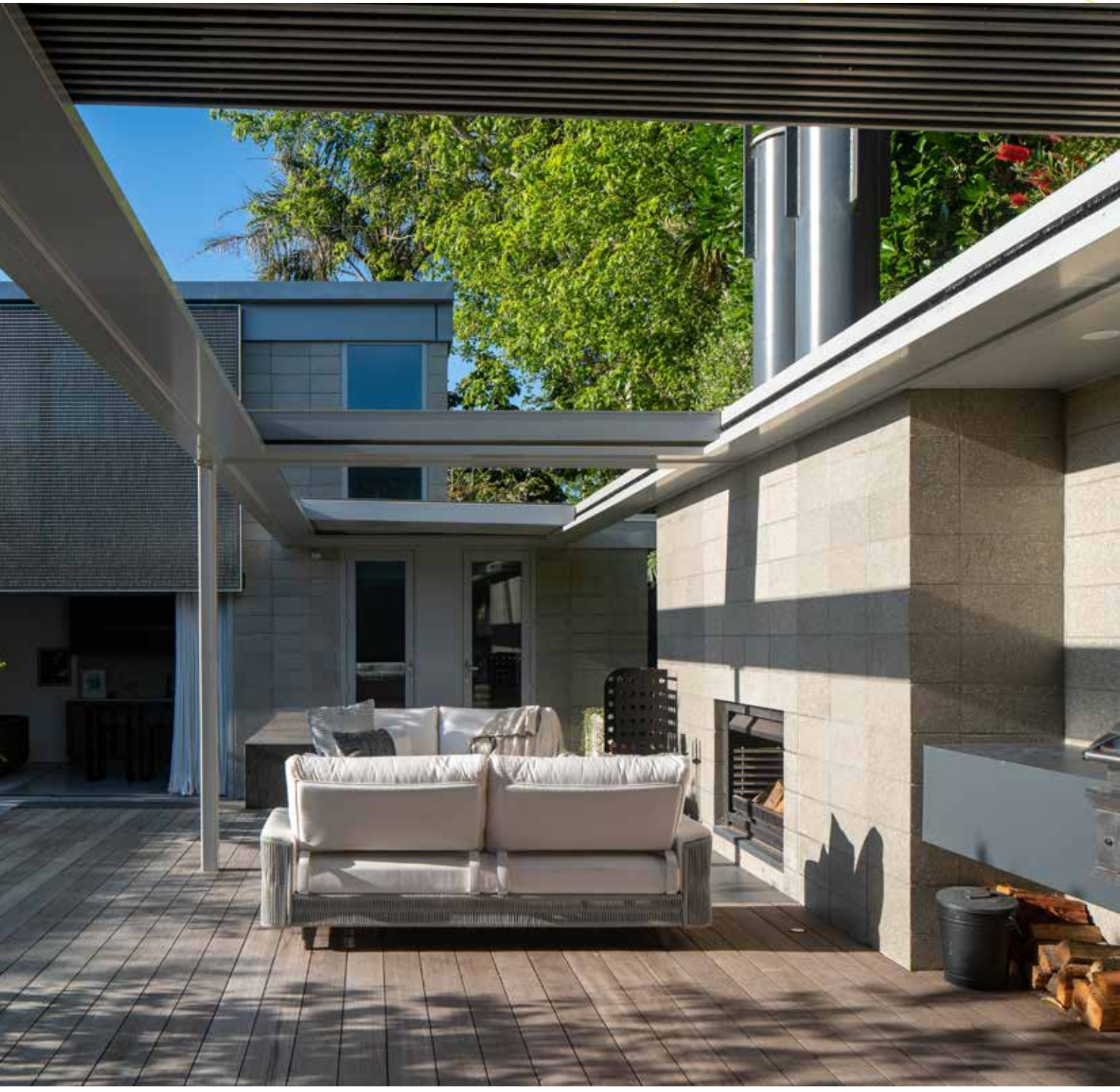

©Louvretec 2025 – All Rights Reserved. Technical specifications subject to change without notice.

RETRACT ROOFS



©Louvretec 2025 – All Rights Reserved. Technical specifications subject to change without notice.

RETRACT ROOFS **GALLERY**









1. RETRACT ROOFS IN 4 SIDED FRAME. PALM BEACH, NSW, AU | **2.** RETRACT ROOFS AT SORA RESTAURANT, ADELAIDE, AU

3. **DOUBLE** RETRACT ROOFS, TAKAPUNA BEACH, NZ | **4.** RETRACT ROOF RETRACTED BACK, BRONTE, NSW, AUS

©Louvretec 2025 – All Rights Reserved. Technical specifications subject to change without notice.



CANAL LIVING, QUEENSLAND
Louvretec 220 retract slimline roof



LOUVRETEC RETRACT SLIMLINE ROOF BLADE SHAPE
(RETRACT & SPIRAL PIVOT COMPATIBLE)



POWERED BY SOMFY MOTORS

LOUVRETEC RETRACT ROOFS

Open | Close | Retract | Repeat

Louvretec Retract Roofs feature a slimline design with a quiet-closing system that seals smoothly onto a bulb seal strip. This creates a snugger fit, and increased overlap coverage when the blades are closed.

Open up your space and enjoy the sky above by retracting the louvre blades as required. When positioned overhead, the louvres provide adjustable shade and shelter, giving you control over your outdoor space.

Louvretec Retract Roof blades are also fully compatible with our spiral pivot opening roofs, making them an ideal solution for multi-roof projects.

Retract slimline Roof Key Features

Available in two sizes;

- Louvretec 220 retract slimline roof
- Louvretec 220/45 retract alpine* roof
  *For larger spans, typically alpine and coastal locations
- Both Retract Roof louvre blades are also compatible with our Spiral Pivot Opening Roofs, a great solution for multi-roof projects!
- Sleek, functional design, clean and uncluttered when open or closed
- Design strength of an extruded double box-section
- Somfy powered
- "Cushion Closing" onto a bulb seal strip
- Increased closing cover angle for added weather protection
- Larger blade gutter incorporated for extra storm-water dispersal

Powered by Somfy

The same tried and true motorisation that operates our award winnning spiral pivot system now operates our retract roofs. Two Somfy motors per retract.

Customised Louvretec Controller

A wireless handheld remote, custom made for Louvretec by Teleco, Italy is standard. These multi-function remotes can also control lighting, heating and other Somfy powered items such as motorised outdoor blinds.

Proudly NZ & Australian designed and manufactured

All jointly designed, manufactured and distributed worldwide by Louvretec NZ Ltd & Louvretec Australia Pty Ltd.

©Louvretec 2025 – All Rights Reserved. Technical specifications subject to change without notice.

LOUVRETEC RETRACT ROOF RANGE

Choose from two Retract Roof options.
Both Retract blades are also compatible with Louvretec's Spiral Pivot Opening Roof system!

louvretec retract — Retract Roofs pivot louvre roof blades open & closed & Retract back

Spiral Pivot Opening Roofs pivot louvre roof blades open & closed

TYPE/COLLECTION	***LOUVRE BLADE STYLE***	***MAXIMUM SPANS***
LOUVRETEC RETRACT ROOFS louvretec retract Both Louvretec Retract Roof blades are also compatible with Louvretec's Spiral Pivot Opening Roof system!	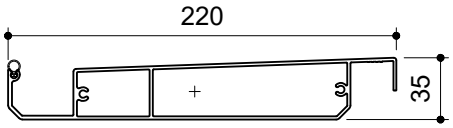 **Louvretec 220 retract slimline roof**	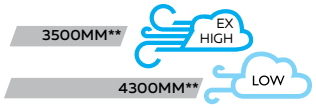 **3M ROOF HEIGHT
	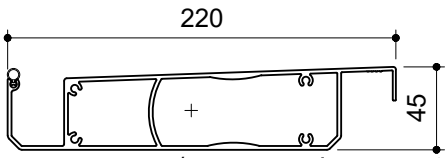 **Louvretec 220/45 retract alpine* roof** *For larger spans, typically alpine and coastal locations	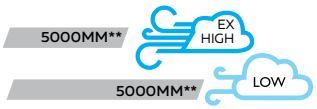 **3M ROOF HEIGHT

RETRACT ROOFS CONFIGURATION OPTIONS



OPTION 1

THREE SIDED FRAME - BLADES STACK TO REAR

- No front beam, blades stack to rear
- Can be even or uneven number of blades



OPTION 2

FOUR SIDED FRAME - BLADES STACK TO ONE END

- Blades can stack to either one end
- Can be even or uneven number of blades

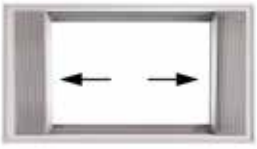

OPTION 3

FOUR SIDED FRAME - BLADES STACK AT EACH END

- Blades split stack from centre to each end
- Must be even number of blades



OPTION 4

FOUR SIDED FRAME - DOUBLE RETRACT (MID-BEAM MAY BE REQUIRED)

- Two Retracts meeting at mid-beam
- No mid-beam gutter required, blades close onto mid-beam flashing
- Blades stack from centre to each end
- Can be even or uneven number of blades
- Maximum length; up to 13.734mm

©Louvretec 2025 – All Rights Reserved. Technical specifications subject to change without notice.

RETRACT ROOFS **CONFIGURATION**

OPTION 1: 3 SIDED FRAME, BLADES STACK TO REAR



3 SIDED FRAME, BLADES IN CLOSED POSITION



3 SIDED FRAME, BLADES STACK TO REAR

©Louvretec 2025 – All Rights Reserved. Technical specifications subject to change without notice.

RETRACT ROOFS **CONFIGURATION** OPTION 2: 4 SIDED FRAME, BLADES STACK TO ONE END



4 SIDED FRAME, BLADES IN CLOSED POSITION



4 SIDED FRAME, BLADES STACK TO ONE END

©Louvretec 2025 – All Rights Reserved. Technical specifications subject to change without notice.

RETRACT ROOFS **CONFIGURATION**

OPTION 3: 4 SIDED FRAME, BLADES STACK TO BOTH ENDS



4 SIDED FRAME, BLADES IN CLOSED POSITION



4 SIDED FRAME, BLADES STACK EVENLY TO BOTH ENDS

©Louvretec 2025 – All Rights Reserved. Technical specifications subject to change without notice.

RETRACT ROOFS **CONFIGURATION**

OPTION 4: 4 SIDED FRAME, DOUBLE RETRACT WITH MID-BEAM BLADES STACK EVENLY OR UNEVENLY TO BOTH ENDS



4 SIDED FRAME, DOUBLE RETRACT WITH MID BEAM, BLADES IN CLOSED POSITION



4 SIDED FRAME, DOUBLE RETRACT WITH MID BEAM, BLADES STACKED EVENLY OR UNEVENLY TO BOTH ENDS

©Louvretec 2025 – All Rights Reserved. Technical specifications subject to change without notice.



Louvretec 220 **retract slimline*** **roof**

**Each blade top tapers to 35mm high. Also Spiral Pivot Opening Roof compatible*



OUTSIDE IN YOUR COMFORT ZONE
BY LOUVRETEC SYDNEY NORTH



Louvretec 220 retract slimline roof blade



LOUVRETEC MULTI-CHANNEL CONTROLLER
Custom programmed.

SURFACE FINISHING OPTIONS
A wide range of options are available.

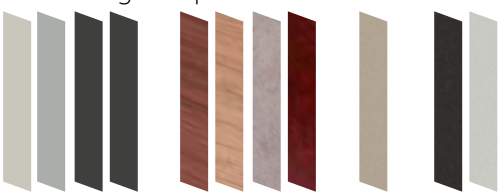

POWDERCOAT WOODGRAIN & SPECIAL FINISHES METALLIC ANODISED

Smart, sleek and multi-purpose

The multi-purpose Louvretec 220 retract slimline roof combines sleek, clean modern design along with excellent spanning capacity. Because the Louvretec 220 retract slimline roof blade is compatible with not only the Retract system but also as a Spiral Pivot Opening Roof it's a great choice for large, multi-roof projects.

Key Features

- Each blade top-tapers to 35mm high
- Sleek, functional design, clean and uncluttered when open or closed
- Design strength of an extruded double box-section
- Blade is compatible as a Spiral Pivot Opening Roof, great for multi-roof projects
- Somfy powered
- "Cushion Closing" onto a bulb seal strip
- Increased closing cover angle for added weather protection
- Larger blade gutter incorporated for extra storm-water dispersal

Clean uncluttered lines

At only 35mm high with a tapering topside, the blades stack superbly and cast minimal shadow when in use.

All the operating mechanism, electronics and motors are incorporated within the side frame extrusions, completely hidden from sight and protected from the weather.

Louvretec Retract Roofs are factory assembled, tested and calibrated as part of the manufacturing process. They come to site pre-wired ready for the electrician to connect through a standard junction box.

©Louvretec 2025 – All Rights Reserved. Technical specifications subject to change without notice.



BLADE SPECIFICATIONS Louvretec 220 retract slimline roof blade

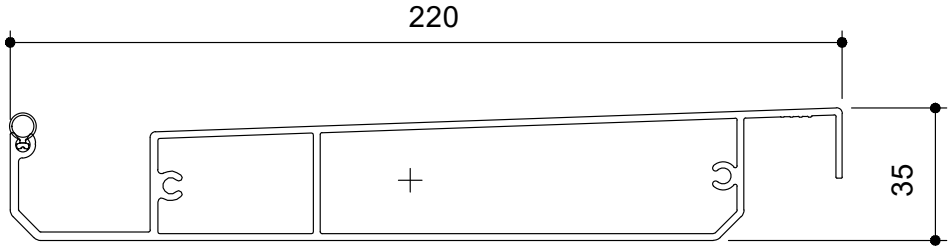

NTS

BLADE SPECIFICATIONS			
Blade cover - opening system	205 mm	Weight per linear metre - opening system	2.655 kg/lm
Weight per square metre - opening system	12.9 kg/sqm	Actual blade width	220 mm
Blade centres - opening system	205 mm		

SPANS AT A GLANCE: Refer Engineering Section.

WIND ZONE	INSIDE	LOW	MEDIUM	HIGH	VERY HIGH	EXTRA HIGH
Factored wind speed at building	Self wt	32 m/s	37m/s	44 m/s	50 m/s	55 m/s
		115 km/hr	133 km/hr	158 km/hr	179 km/hr	198 km/hr
Louvretec 220 retract slimline roof **3m Height**	4300	4300	4300	4200	4000	3500
Louvretec 220 retract slimline roof **6m Height**		4300	4300	4050	3500	3150

TYPICAL CROSS SECTIONS



Louvretec 220 retract slimline roof
BLADES OPEN

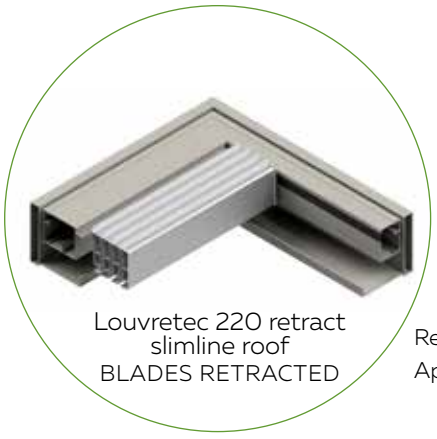

Louvretec 220 retract slimline roof
BLADES RETRACTED

Retracted area:
Approx. 25% of opening

TO CALCULATE EXACT OPENING SIZES FOR RETRACT SYSTEM
REFER TO PAGES 3.24 - 3.35 (DEPENDING ON FRAME CHOICE) IN THIS SECTION

©Louvretec 2025 – All Rights Reserved. Technical specifications subject to change without notice.

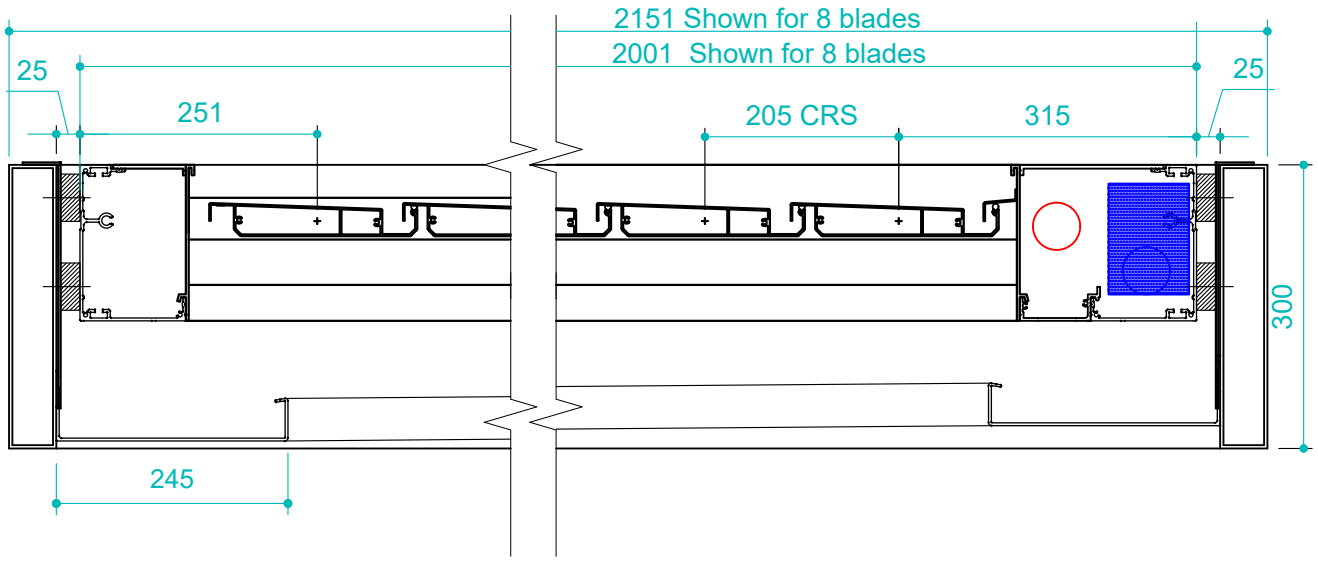

CROSS SECTION THROUGH BLADES
THIS DIMENSION IS CRITICAL AND IS DETERMINED BY THE NUMBER OF BLADES USED AND THE CONFIGURATION OF THE RETRACT ROOF

FOR RETRACT BLADE CALCULATION SHEETS
REFER TO PAGES 3.24 - 3.35 (DEPENDING ON FRAME CHOICE) IN THIS SECTION

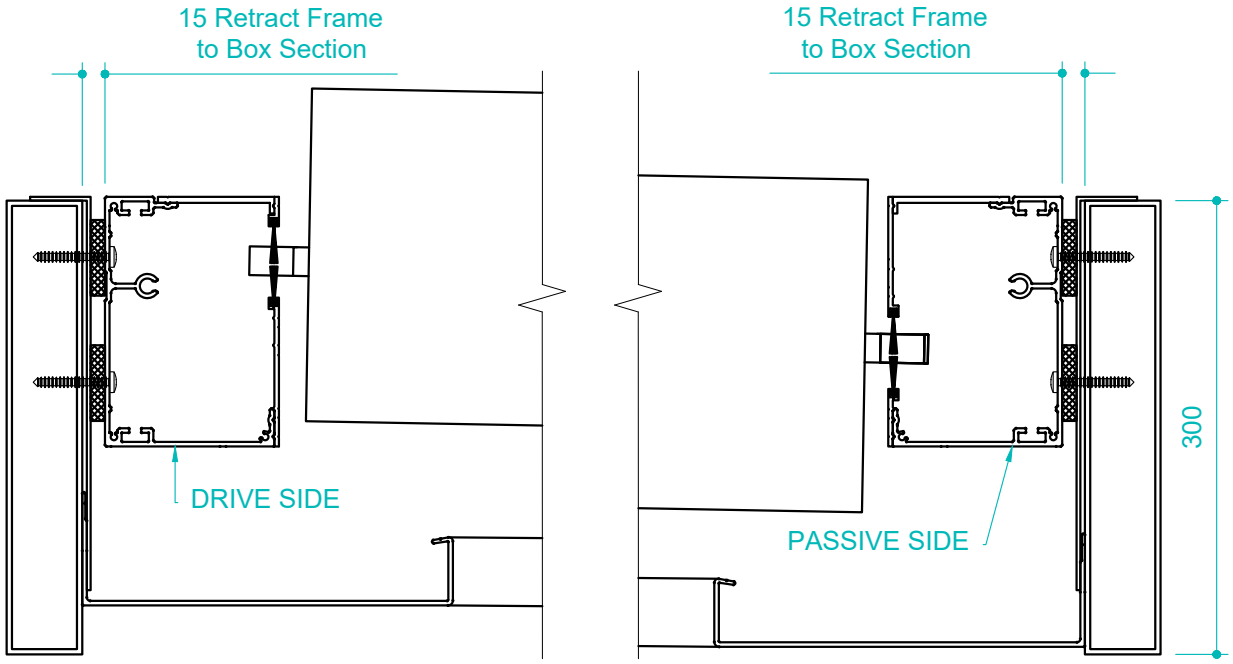

CROSS SECTION RUNNING WITH BLADES
THIS DIMENSION IS FLEXIBLE AND LIMITED ONLY BY SPANNING CAPABILITY OF RETRACT BLADE

FOR RETRACT BLADE SPAN CHART
REFER TO PAGES 3.12 IN THIS RETRACT ROOF SECTION

©Louvretec 2025 – All Rights Reserved. Technical specifications subject to change without notice.



Louvretec 220/45 **retract alpine*** **roof**

**For larger spans, typically alpine and coastal locations*

Outstanding span and multi-purpose

The Louvretec 220/45 retract alpine* roof leads the way with outstanding spanning capabilities making it ideal for high wind zones and alpine regions.

This retract roof is a larger spanning version of the 220 retract slimline roof.

Key Features

- Winner of the Window Shading Association of Australia (WSAA) Product Innovation Award, 2026
- This louvre blade is compatible as a retract roof as well as a Spiral Pivot Roof system, making it a perfect solution for multi-roof projects
- Sleek, functional design, clean and uncluttered when open or closed
- Design strength of an extruded double box-section
- Somfy powered
- "Cushion Closing" onto an external sun-resistant PVC bulb seal
- Increased closing cover angle for added weather protection
- Larger blade gutter incorporated for extra storm-water dispersal

Market Leading Design

Motorised by powerful twin Somfy Tubular motors, a multi-purpose Louvretec controller comes as standard. The system can also be configured for home automation technology.

All the operating mechanism. Electronics and motors are incorporated within the side frame extrusions, completely hidden from sight and protected from the weather.

Louvretec Retracts are factory assembled, tested and calibrated as part of the manufacturing process. They come to site pre-wired ready for the electrician to connect through a standard junction box.



WAIPU COVE, NORTHLAND NZ



Louvretec 220/45 retract alpine* roof blade
Available Retract or Spiral Pivot

RETRACT



LOUVRETEC MULTI-CHANNEL CONTROLLER
Custom programmed.

SURFACE FINISHING OPTIONS
A wide range of options are available.

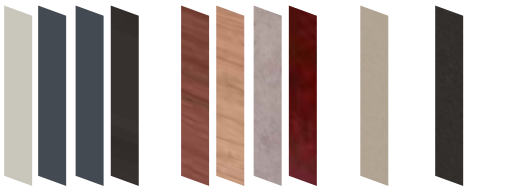

POWDERCOAT | WOODGRAIN & SPECIAL FINISHES | METALLIC | ANODISED

©Louvretec 2025 – All Rights Reserved. Technical specifications subject to change without notice.



BLADE SPECIFICATIONS Louvretec 220/45 retract alpine* roof

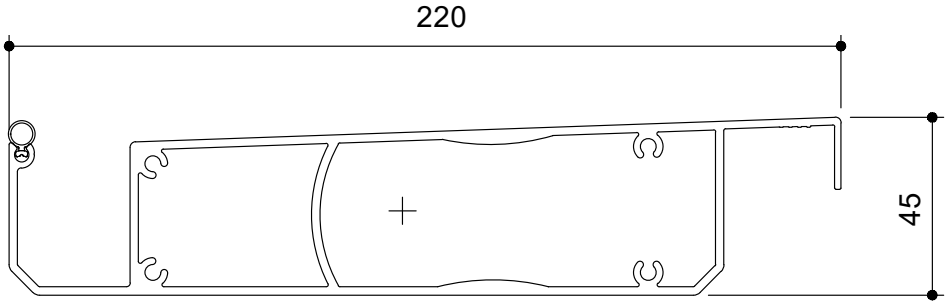

***For larger spans, typically alpine and coastal locations** NTS

BLADE SPECIFICATIONS			
Blade cover - opening system	205 mm	Weight per linear metre - opening system	3.74 kg/lm
Weight per square metre - opening system	18.2 kg/sqm	Actual blade width	220 mm
Blade centres - opening system	205 mm		

SPANS AT A GLANCE: Refer Engineering Section.

WIND ZONE	INSIDE	LOW	MEDIUM	HIGH	VERY HIGH	EXTRA HIGH
Factored wind speed at building	Self wt	32 m/s	37m/s	44 m/s	50 m/s	55 m/s
		115 km/hr	133 km/hr	158 km/hr	179 km/hr	198 km/hr
Louvretec 220/45 retract alpine* roof **3m Height**	5000	5000	5000	5000	5000	5000
Louvretec 220/45 retract alpine* roof **6m Height**		5000	5000	5000	5000	4700

TYPICAL CROSS SECTIONS



Louvretec 220/45 retract alpine* roof
BLADES OPEN



Louvretec 220/45 retract alpine* roof
BLADES RETRACTED

Retracted area:
Approx. 25% of opening

TO CALCULATE EXACT OPENING SIZES FOR RETRACT SYSTEM
REFER TO PAGES 3.24 - 3.35 (DEPENDING ON FRAME CHOICE) IN THIS SECTION

SNOW LOADINGS
REFER ENGINEERING SECTION, PAGES 13.31 & 13.32

©Louvretec 2025 - All Rights Reserved. Technical specifications subject to change without notice.

TYPICAL DETAIL : Cross sections Louvretec 220/45 retract alpine* roof, within 300x50 aluminium structural frame

*For larger spans, typically alpine and coastal locations

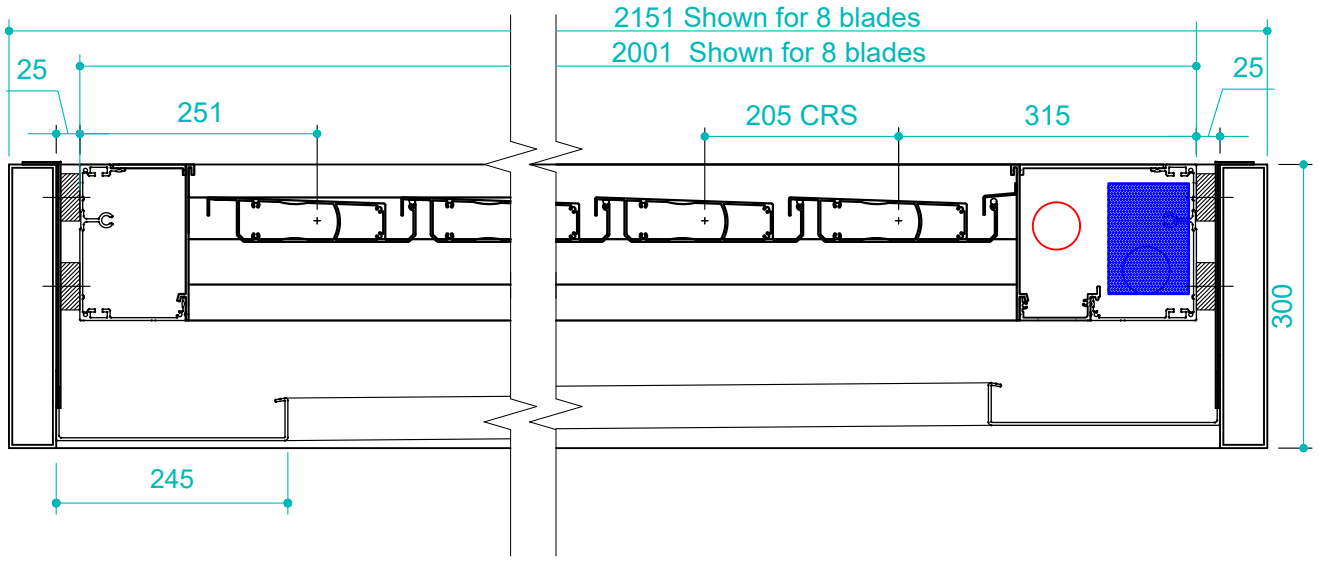

CROSS SECTION THROUGH BLADES

THIS DIMENSION IS CRITICAL AND IS DETERMINED BY THE NUMBER OF BLADES USED AND THE CONFIGURATION OF THE RETRACT ROOF.

FOR RETRACT BLADE CALCULATION SHEETS

REFER TO PAGES 3.24 - 3.35 (DEPENDING ON FRAME CHOICE) IN THIS SECTION

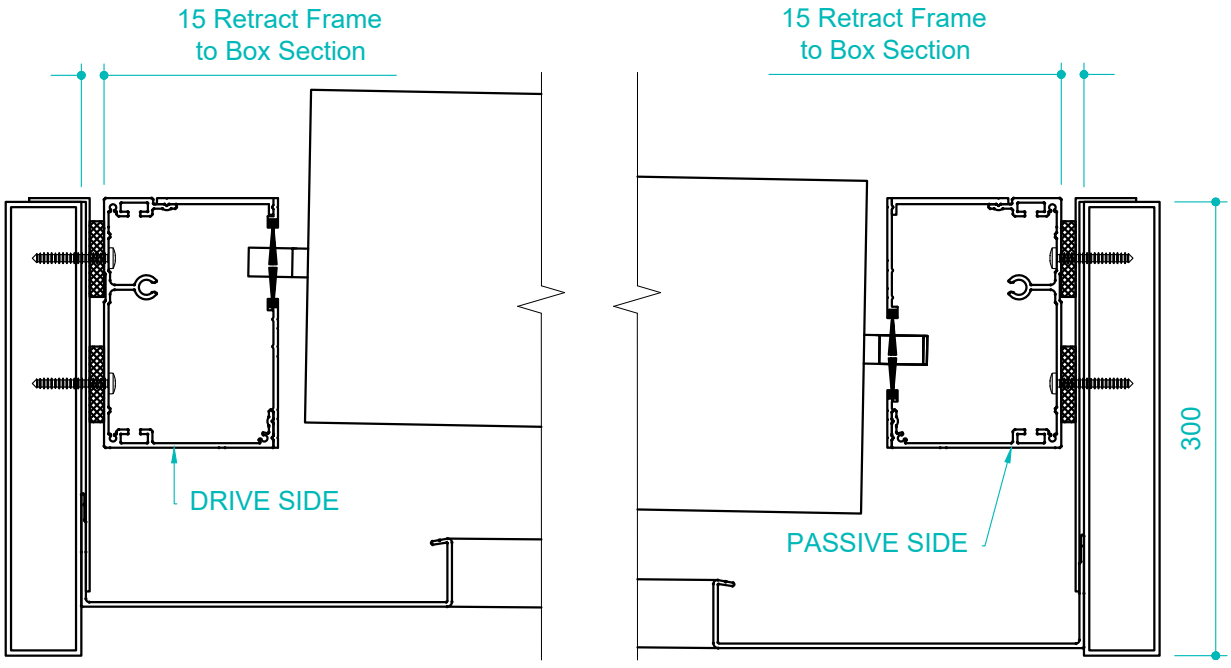

CROSS SECTION RUNNING WITH BLADES

THIS DIMENSION IS FLEXIBLE AND LIMITED ONLY BY SPANNING CAPABILITY OF RETRACT BLADE.

FOR RETRACT BLADE SPAN CHART

REFER TO PAGE 3.15 IN THIS RETRACT ROOF SECTION

FILE: RETRACT 3.16

DATE MODIFIED: 01/10/2026 SCALE:

www.louvretec.co.nz www.louvretec.com.au

©Louvretec 2025 - All Rights Reserved. Technical specifications subject to change without notice.

TYPICAL DETAIL: Louvretec 220/45 retract alpine* roof, within Louvretec structural frame

*For larger spans, typically alpine and coastal locations

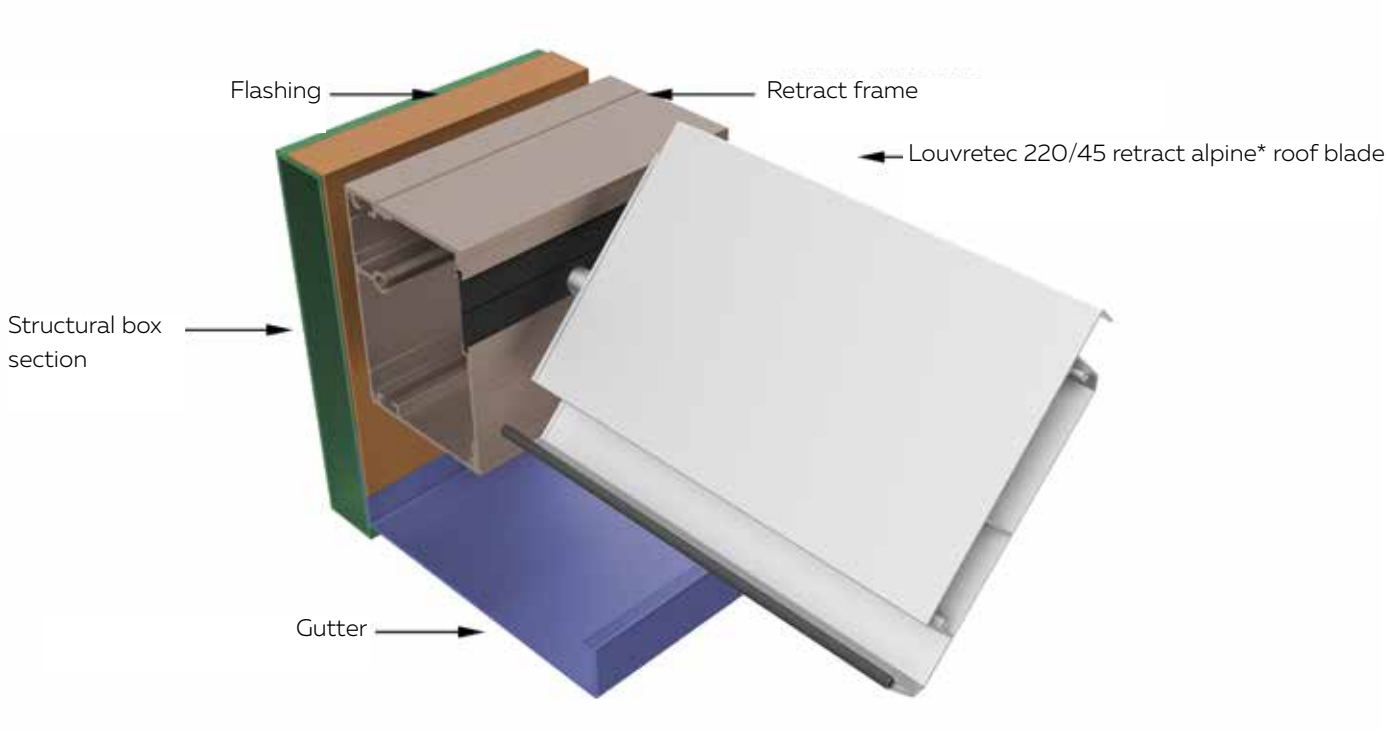

CROSS SECTION SHOWING DRIVE FRAME, BLADE, GUTTER & FLASHING WITHIN 300X50 BOX SECTION FRAME

TYPICAL DETAIL : FALL & CLEARANCES ON RETRACT BLADES

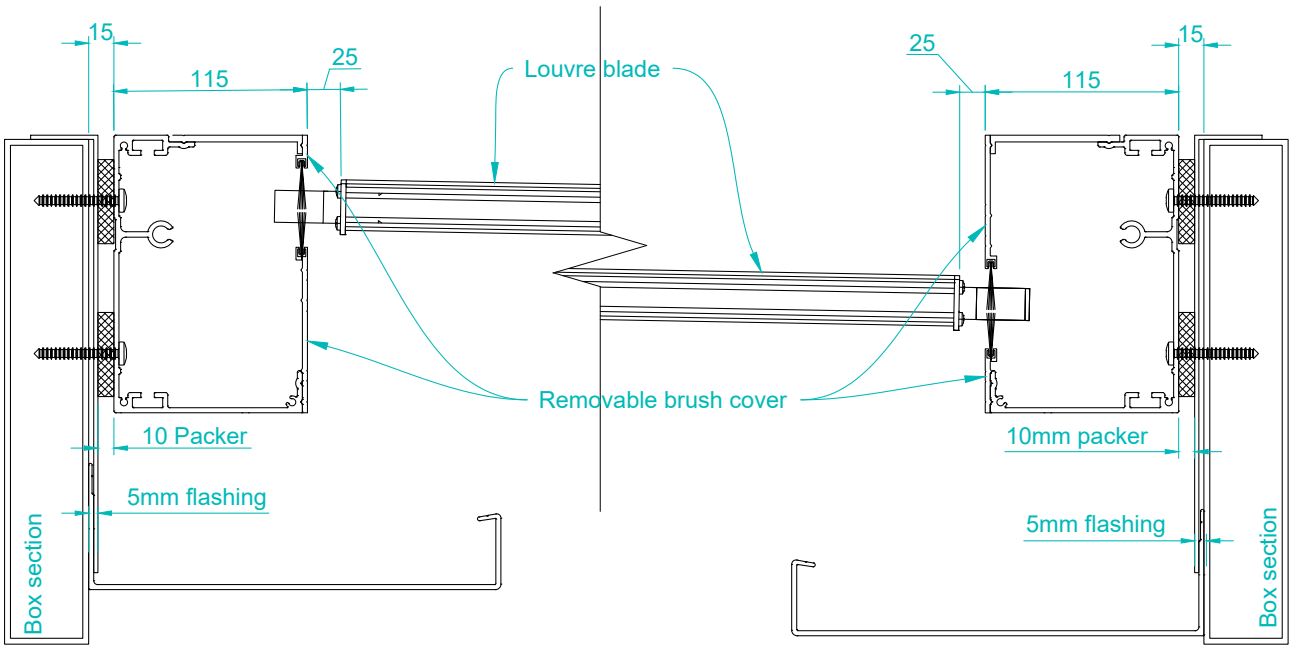

DRIVE SIDE
HIGH SIDE OF BLADE

PASSIVE SIDE
LOW SIDE OF BLADE

RETRACT ROOFS ARE TYPICALLY INSTALLED LEVEL
FALL ACROSS THE BLADES IS ACHIEVED WITH THE BLADES SET HIGHER ON THE DRIVE SIDE, FALLING 60mm TO THE PASSIVE SIDE.

60mm FALL IS COMMON ON ALL RETRACTS IRRESPECTIVE OF BLADE LENGTH.

©Louvretec 2025 – All Rights Reserved. Technical specifications subject to change without notice.



PITCHED RETRACT ROOFS

A Pitched Retract Roof is now available

- Retract Roofs can now be installed on a pitch of up to 15 degrees slope
- Blades must run in the same direction as the roof pitch
- Blades can be stacked evenly to both ends or all LH end/all RH end
- Refer technical cross-section details on page 3.19 showing typical Pitched Roof Flashing details.



LETS GET PITCHED



©Louvretec 2025 – All Rights Reserved. Technical specifications subject to change without notice.

TECHNICAL DETAILS: PLAN VIEW

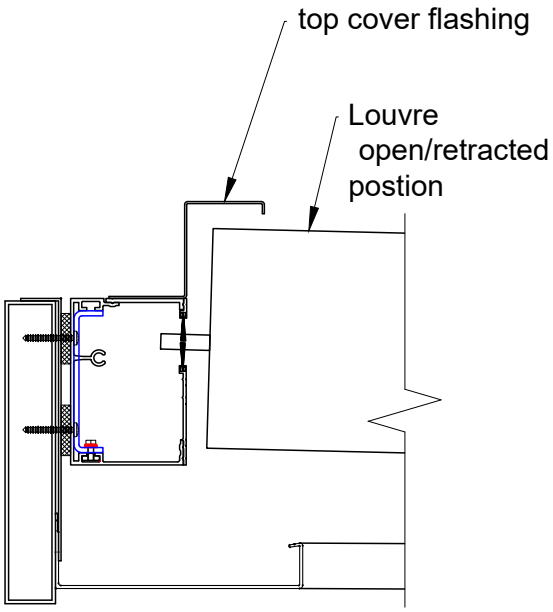

Section A-A

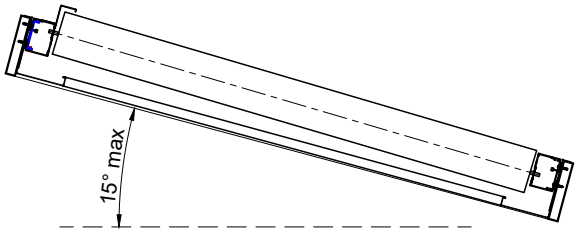

Maximum pitch up to °15
Section B-B

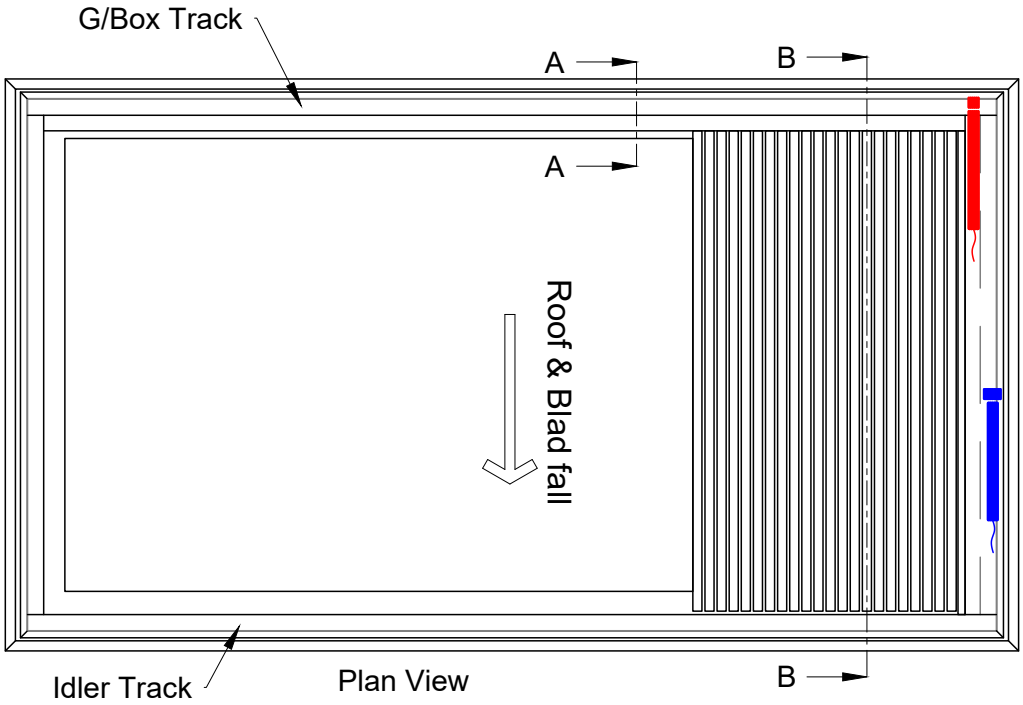

©Louvretec 2025 – All Rights Reserved. Technical specifications subject to change without notice.

TYPICAL DETAIL : RETRACT ROOF EXTRUSIONS

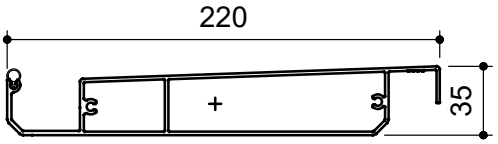

Louvretec 220 retract slimline roof

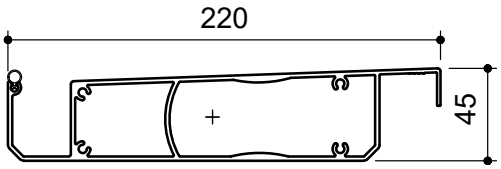

Louvretec 220/45 retract alpine* roof

*For larger spans, typically alpine and coastal locations

Removable Cover for Motor Frame

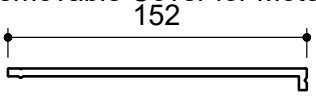

Removable Cover for End Fixing

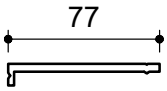

260x40 Flashing

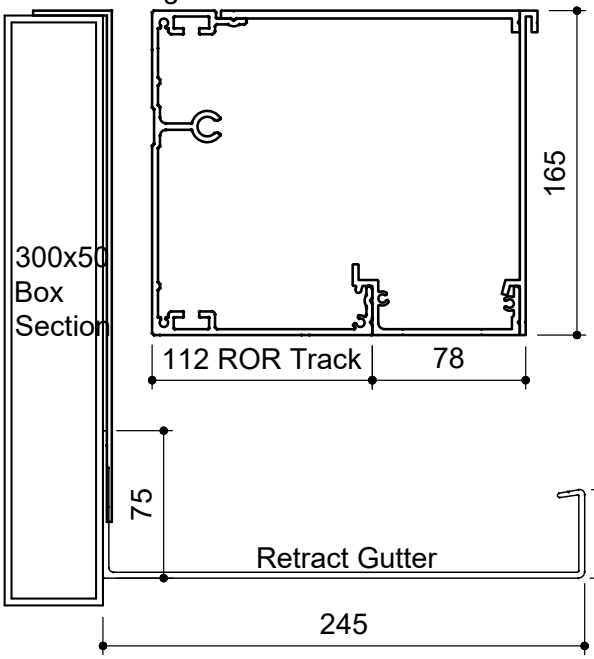

End Cover, fits to both Extended Motor Frame & End Frame

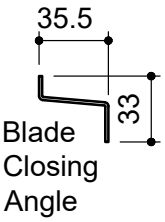

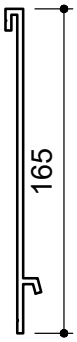

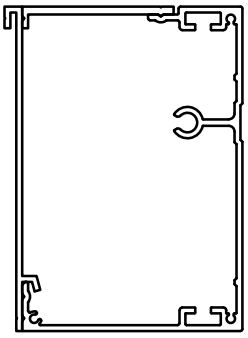

End Frame with End Covers Installed

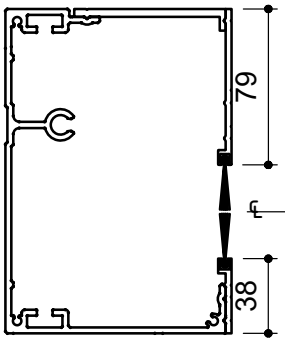

Passive Frame Assembly with Brush Covers installed

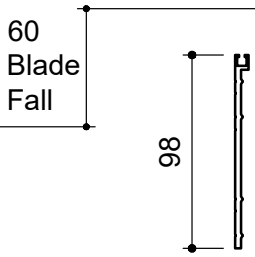

Brush Cover Cuts to 4 different sizes for Drive & Passive Frames Assemblies

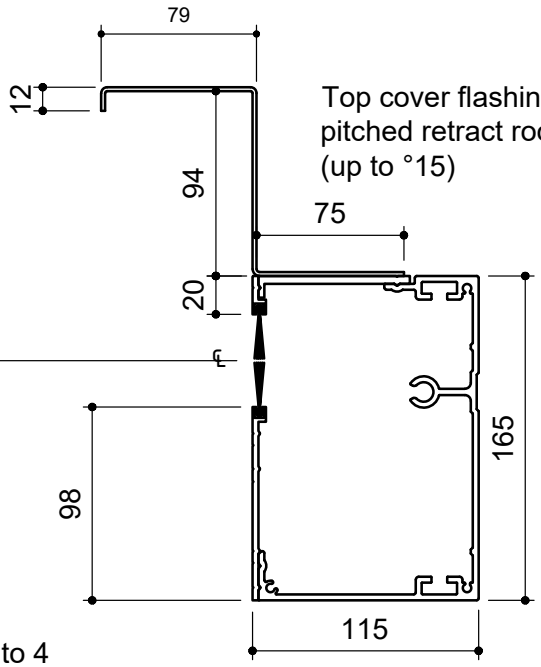

Top cover flashing for pitched retract roofs (up to °15)

Drive Frame Assembly with Brush Covers installed

©Louvretec 2025 - All Rights Reserved. Technical specifications subject to change without notice.



TWO MOTORS FOR TWO FUNCTIONS

Louvretec's Retract Roofs have two operating functions, each controlled by separate Somfy 25Nm motors

Motor 1 - Retract Motor

This Motor Retracts | Extends the Louvre Blades

Motor 2 - Rotate motor

This Motor functions like a standard Opening Roof - rotating the Louvre Blades between 0 to 135°

Fall on blades

This is determined by the location of the **Rotate Motor** which is always located on the high side of the Blade. Fall on Blades is always 60mm from Drive Side down to Passive Side.



ROTATE MOTOR &
RETRACT DRIVE SHAFT

TECHNICAL DETAILS **RETRACT & ROTATE TWIN MOTORS - 3 SIDED FRAME**

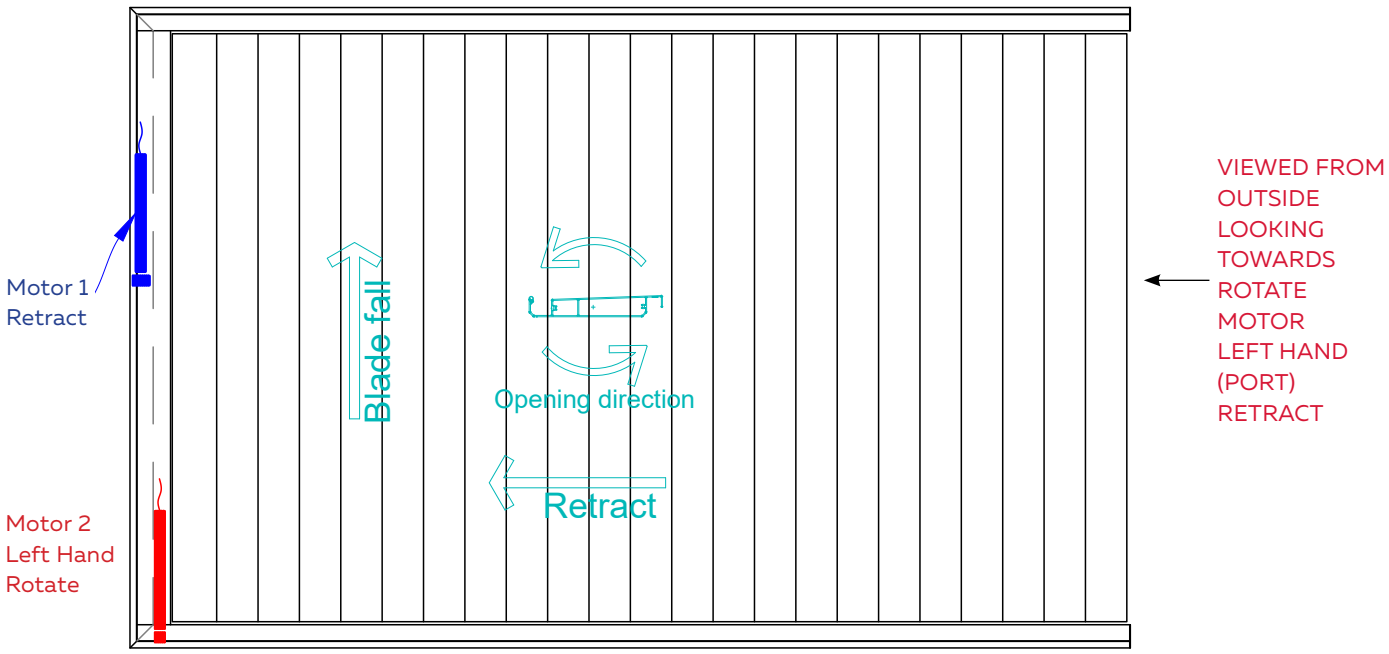

©Louvretec 2025 - All Rights Reserved. Technical specifications subject to change without notice.

TECHNICAL DETAILS **RETRACT & ROTATE TWIN MOTORS - 4 SIDED FRAME**

4 SIDED FRAME

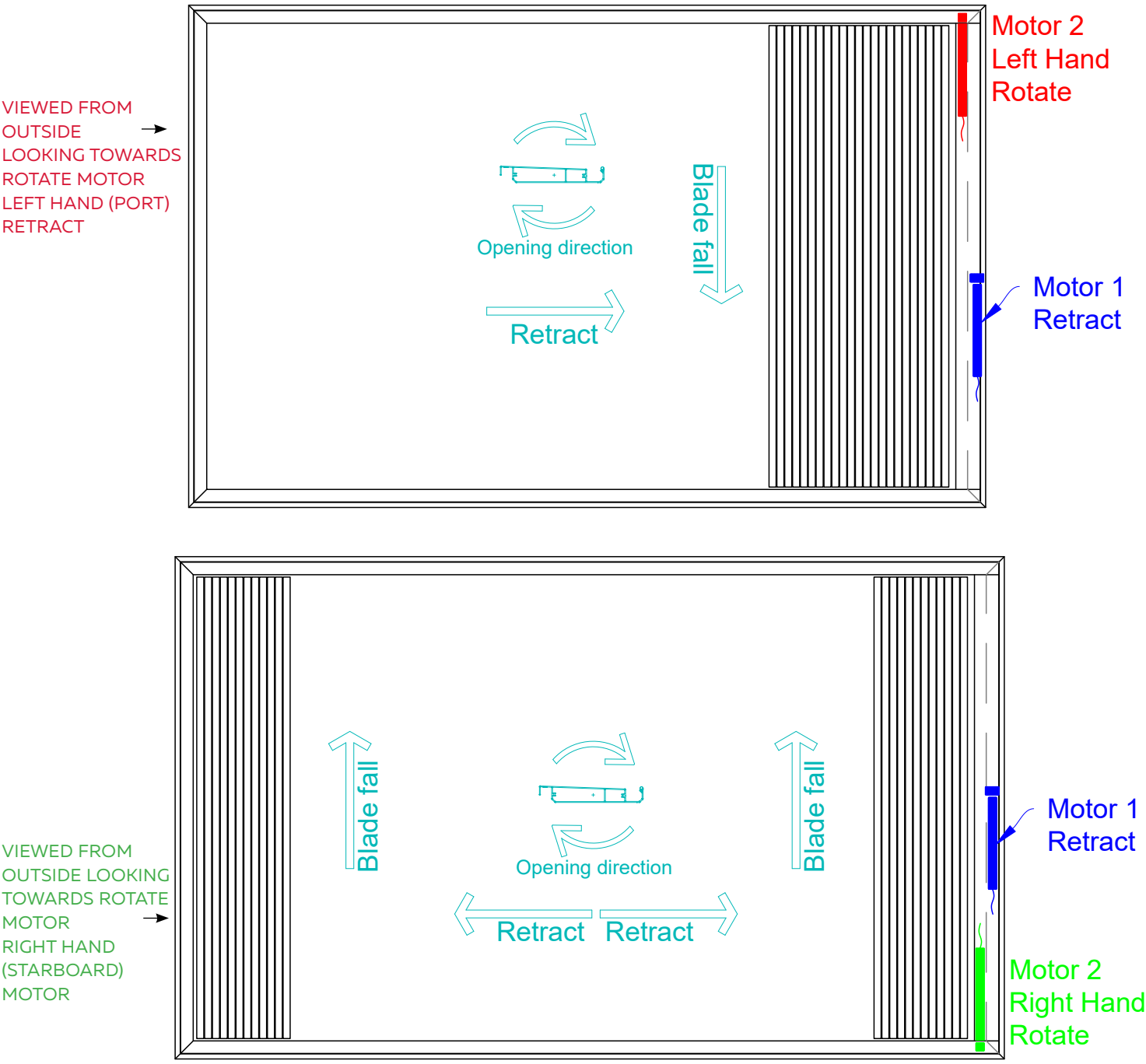

Fall on blades

This is determined by the location of the **Rotate Motor** which is always located on the high side of the blade.
REFER TO ILLUSTRATIONS ON THIS PAGE
(LEFT HAND - PORT) or
(RIGHT HAND - STARBOARD)
as viewed from outside looking towards the motor.

©Louvretec 2025 – All Rights Reserved. Technical specifications subject to change without notice.

TECHNICAL DETAILS **WIRE POSITIONS FOR RUNNING POWER TO CONTROLLER**

- When preparing to run power to the Retract, plan to enter the frame approximately 300mm away from the motor corner (the controller side) and 100mm down from the top.
- Leave enough excess cable to reach the middle of the frame.
- Protect the wire from sharp metal edges by using flex conduit or other suitable sheathing.
- A local isolation switch is required.

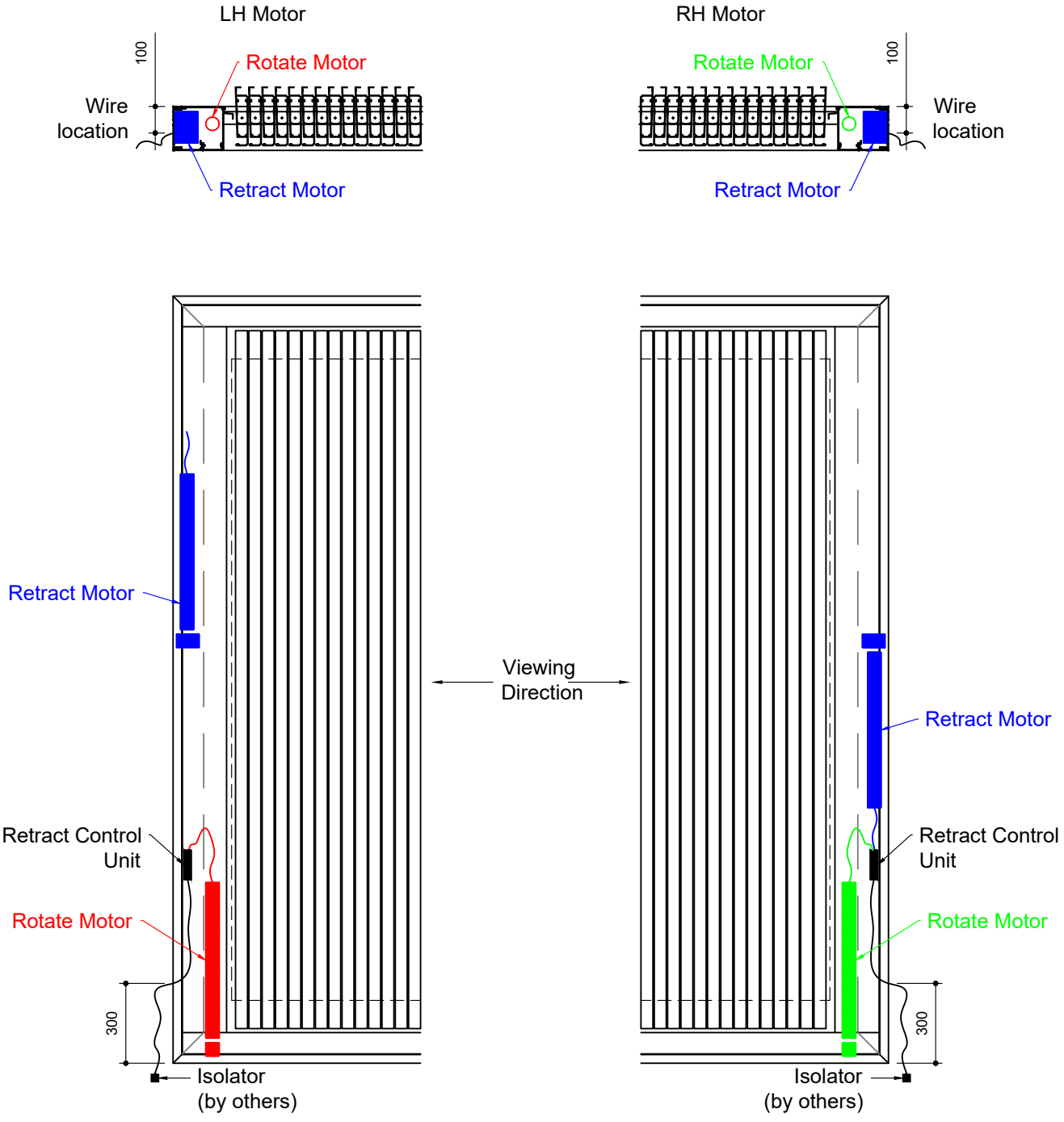

©Louvretec 2025 – All Rights Reserved. Technical specifications subject to change without notice.

CONFIGURATIONS **OPTION 1: 3 SIDED FRAME**

CALCULATING RETRACT FRAME SIZES

The overall length of a Louvretec Retract Roof is a module size pre-determined by the frame configuration, ie: 3 sided frame or 4 sided frame plus the number of blades.

OPTION 1: THREE SIDED FRAME

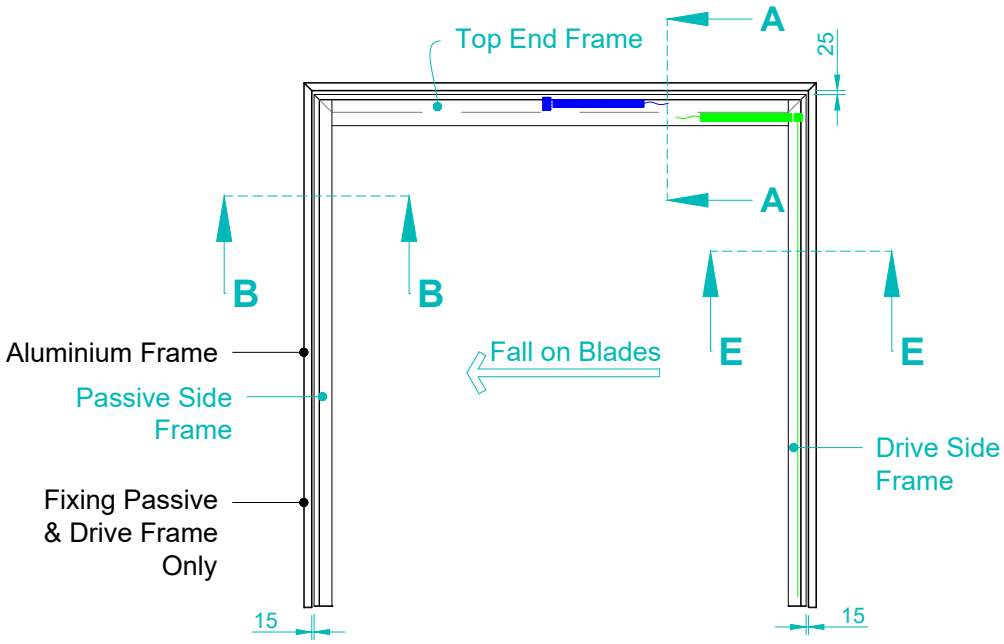

FOR RETRACT THREE SIDED BLADE CALCULATIONS SHEETS REFER TO PAGES 3.23 - 3.24 IN THIS SECTION

These sizes cannot be varied or altered. Take great care when site measuring and calculating frame length.

On a 4 sided frame additional room is required to site assemble the mitred corners, therefore 15mm spacing is allowed for sides with 25mm spacing allowed on the top and bottom frames.

Due to the additional depth required with a Retract Roof a 300x50 aluminium box section is the standard structural outer frame.

15mm SPACING
= 10mm PACKER = 5mm FLASHING

25mm SPACING
= 20mm PACKER + 5mm FLASHING

TYPICAL ALLOWANCE FOR PACKERS ON A 3 SIDED FRAME

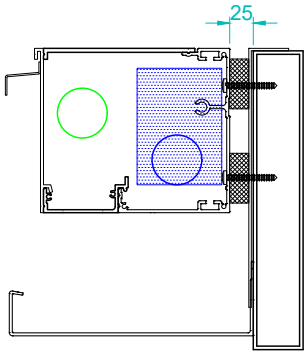

Section A-A
Top End Frame

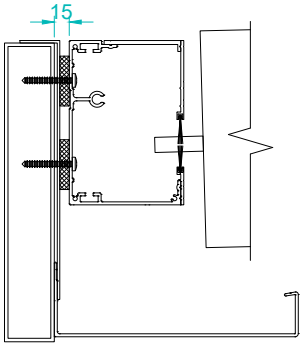

Section B-B
Passive Side Frame

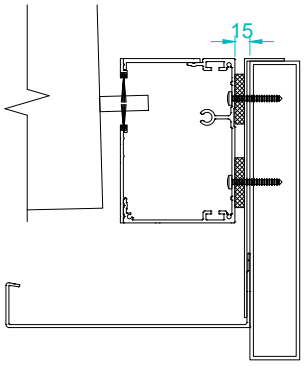

Section E-E
Drive Side Frame

©Louvretec 2025 – All Rights Reserved. Technical specifications subject to change without notice.

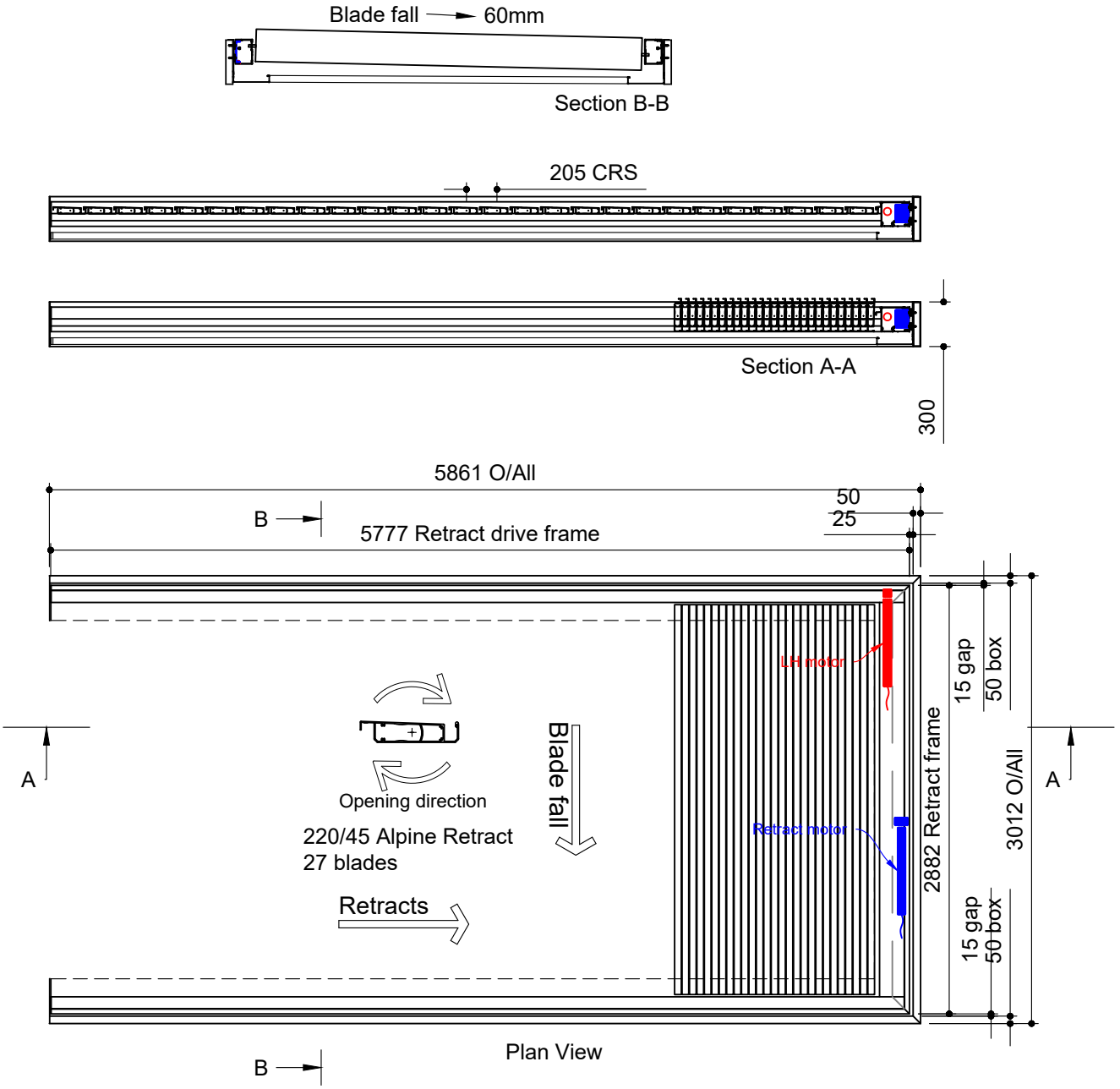

EXAMPLE: 27 BLADES, 3 SIDED RETRACT ROOF SITTING WITHIN 300X50 ALUMINIUM BOX SECTION FRAME. BLADES STACK TO ONE END.

FOR RETRACT BLADE CALCULATION SHEET
REFER TO PAGE 3.26 IN THIS RETRACT ROOF SECTION

TYPICAL DETAIL : 3 SIDED RETRACT ROOF
WITH AND WITHOUT STRUCTURAL BOX FRAME

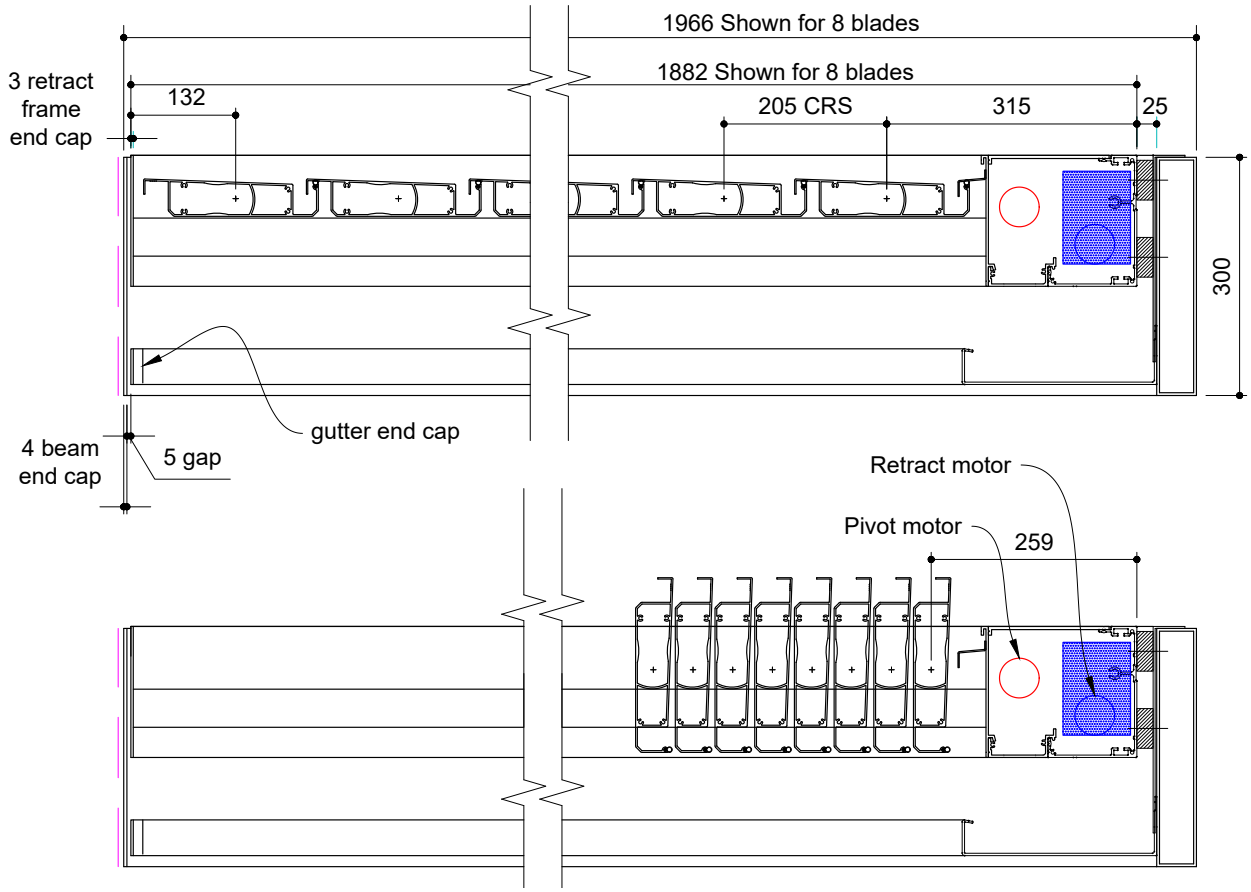

Retract module sizes with Somfy Motors			
Retract Frame 3 sides			
		Fitting into frame by others	Including our 300x50 Frame
No of Blades	Retract Drive & Passive Frames	Clearance +25	Box Frame +50 Box End Cap +9
8	1882	1907	1966
9	2087	2112	2171
10	2292	2317	2376
11	2497	2522	2581
12	2702	2727	2786
13	2907	2932	2991
14	3112	3137	3196
15	3317	3342	3401
16	3522	3547	3606
17	3727	3752	3811
18	3932	3957	4016
19	4137	4162	4221
20	4342	4367	4426
21	4547	4572	4631
22	4752	4777	4836
23	4957	4982	5041
24	5162	5187	5246
25	5367	5392	5451
26	5572	5597	5656
27	5777	5802	5861
28	5982	6007	6066
29	6187	6212	6271
30	6392	6417	6476
31	6597	6622	6681
32	6802	6827	6886

©Louvretec 2025 – All Rights Reserved. Technical specifications subject to change without notice.

CALCULATING RETRACT FRAME SIZES

The overall length of a Louvretec Retract Roof is a module size pre-determined by the frame configuration, ie: 3 sided frame or 4 sided frame plus the number of blades.

OPTION 2: FOUR SIDED FRAME

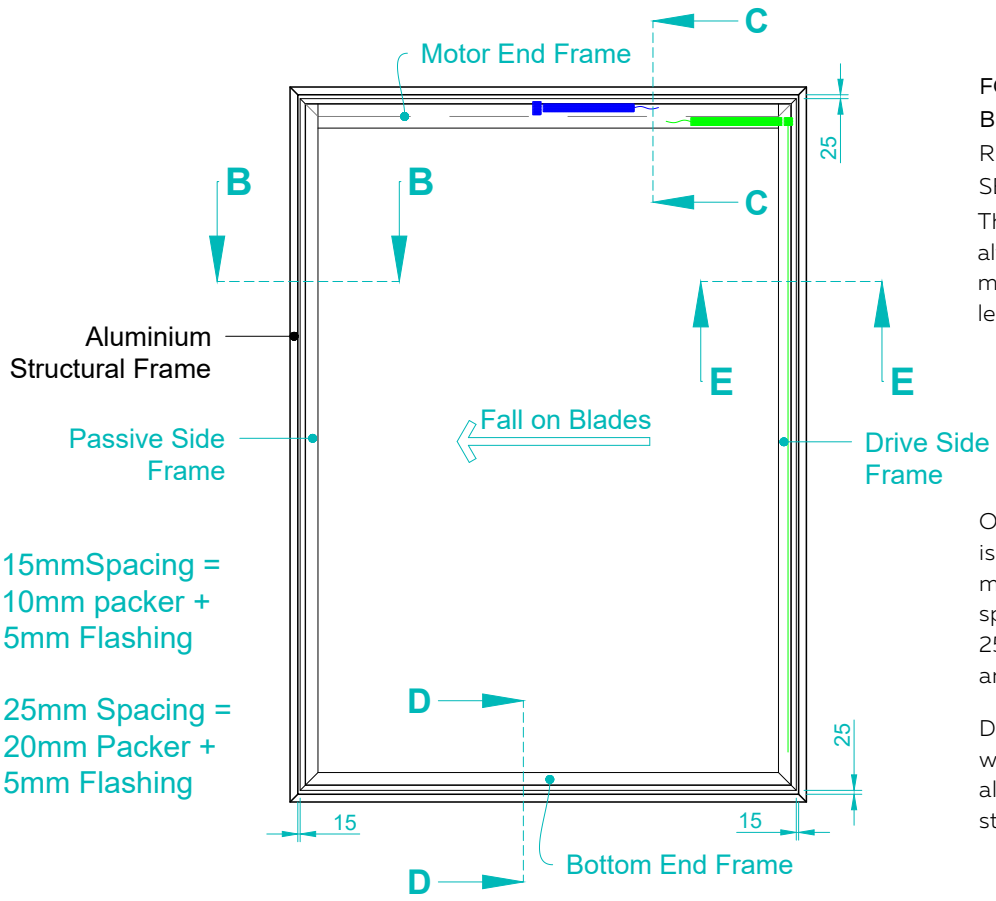

FOR RETRACT FOUR SIDED BLADE CALCULATIONS SHEETS REFER TO PAGES 3.30 - 3.35 IN THIS SECTION

These sizes cannot be varied or altered. Take great care when site measuring and calculating frame length.

On a 4 sided frame additional room is required to site assemble the mitred corners, therefore 15mm spacing is allowed for sides with 25mm spacing allowed on the top and bottom frames.

Due to the additional depth required with a Retract Roof a 300x50 aluminium box section is the standard structural outer frame.

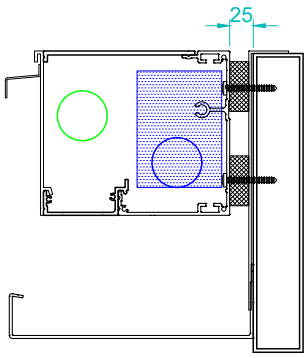

Section C-C
Top End Frame

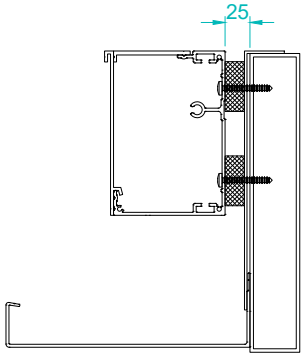

Section D-D
Bottom End Frame

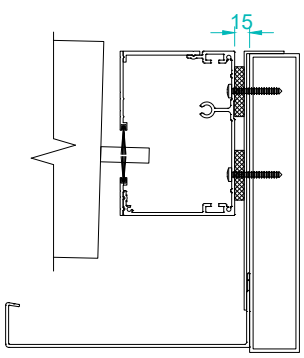

Section B-B
Passive Side Frame

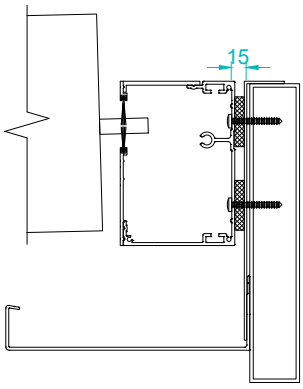

Section E-E
Drive Side Frame

©Louvretec 2025 - All Rights Reserved. Technical specifications subject to change without notice.

TYPICAL DETAIL : 4 SIDED RETRACT ROOF
WITHIN 300X50 ALUMINIUM STRUCTURAL FRAME, BLADES STACK TO ONE END

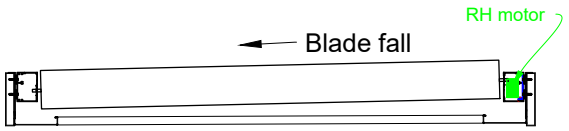

Section B-B

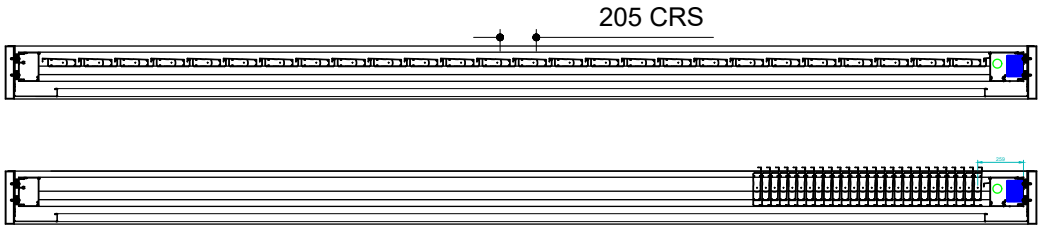

Section A-A

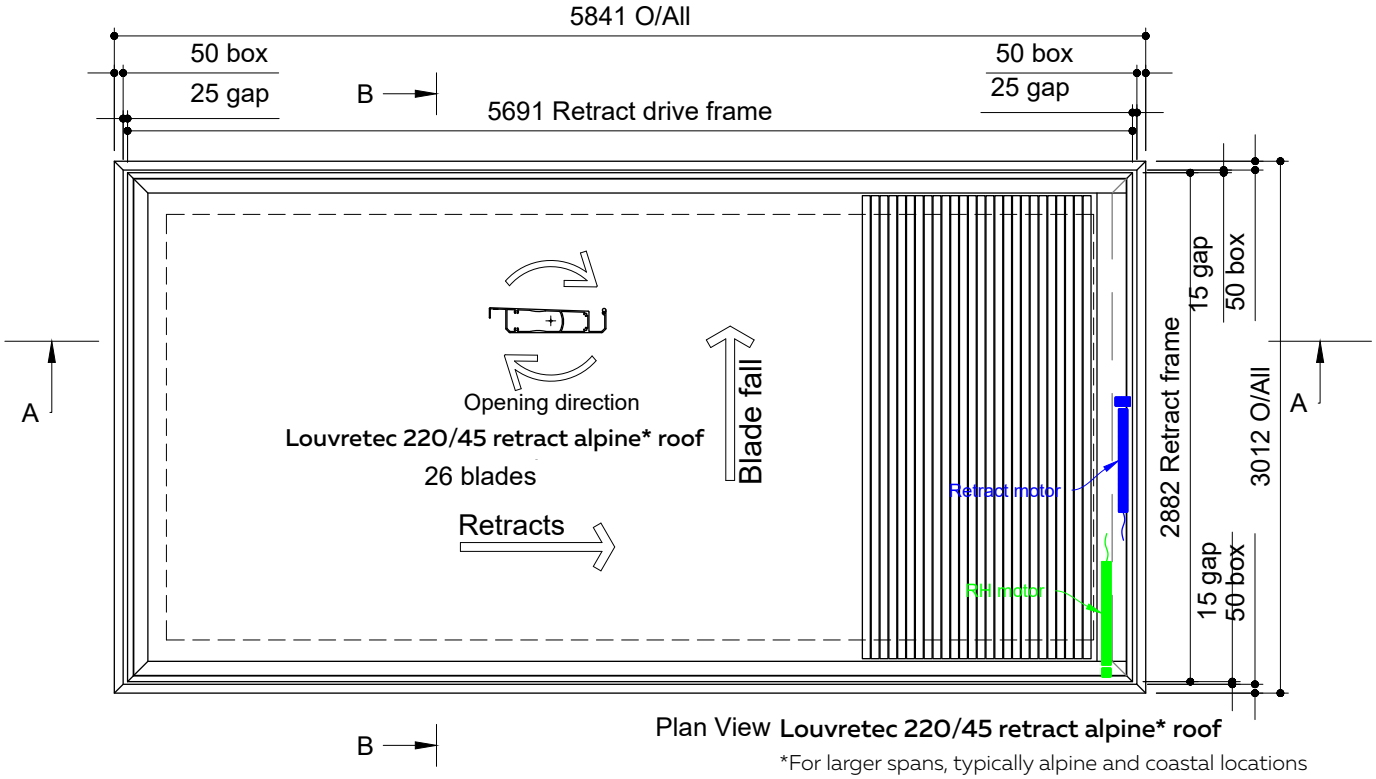

Plan View **Louvretec 220/45 retract alpine* roof**

*For larger spans, typically alpine and coastal locations

EXAMPLE: 26 BLADES, 4 SIDED RETRACT ROOF SITTING WITHIN 300X50 ALUMINIUM STRUCTURAL FRAME. BLADES STACK TO ONE END.

FOR RETRACT BLADE CALCULATION SHEET
REFER TO PAGE 3.29 IN THIS RETRACT ROOF SECTION

©Louvretec 2025 - All Rights Reserved. Technical specifications subject to change without notice.

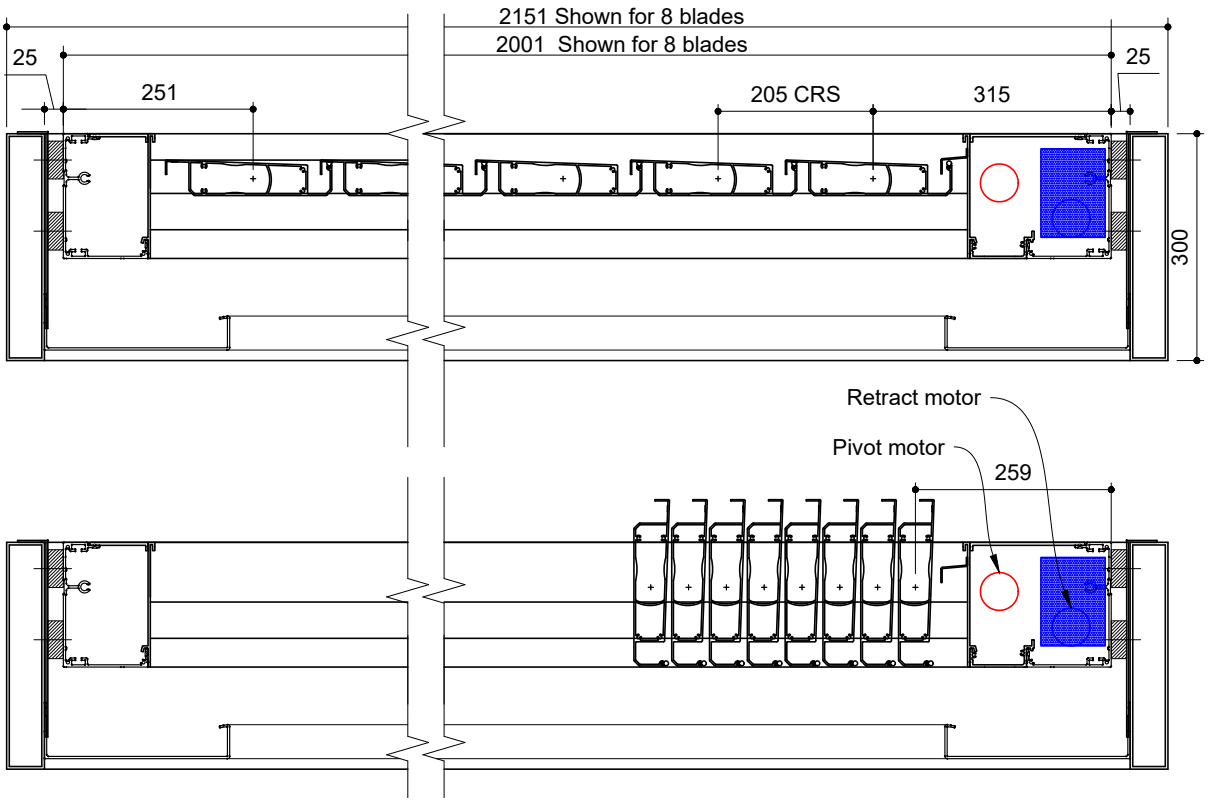

Retract module sizes with Somfy Motors			
Retract Frame 4 sides, Blades retracting to one side			
		Fitting into frame by others	Including our 300x50 frame
No of Blades	Retract Drive & Passive Frames	Clearance +25 +25	Box Frame +50 +50
8	2001	2051	2151
9	2206	2256	2356
10	2411	2461	2561
11	2616	2666	2766
12	2821	2871	2971
13	3026	3076	3176
14	3231	3281	3381
15	3436	3486	3586
16	3641	3691	3791
17	3846	3896	3996
18	4051	4101	4201
19	4256	4306	4406
20	4461	4511	4611
21	4666	4716	4816
22	4871	4921	5021
23	5076	5126	5226
24	5281	5331	5431
25	5486	5536	5636
26	5691	5741	5841
27	5896	5946	6046
28	6101	6151	6251
29	6306	6356	6456
30	6511	6561	6661
31	6716	6766	6866
32	6921	6971	7071

TYPICAL DETAIL : 4 SIDED RETRACT ROOF
WITHIN 300X50 ALUMINIUM STRUCTURAL FRAME, BLADES STACK EVENLY TO EACH END

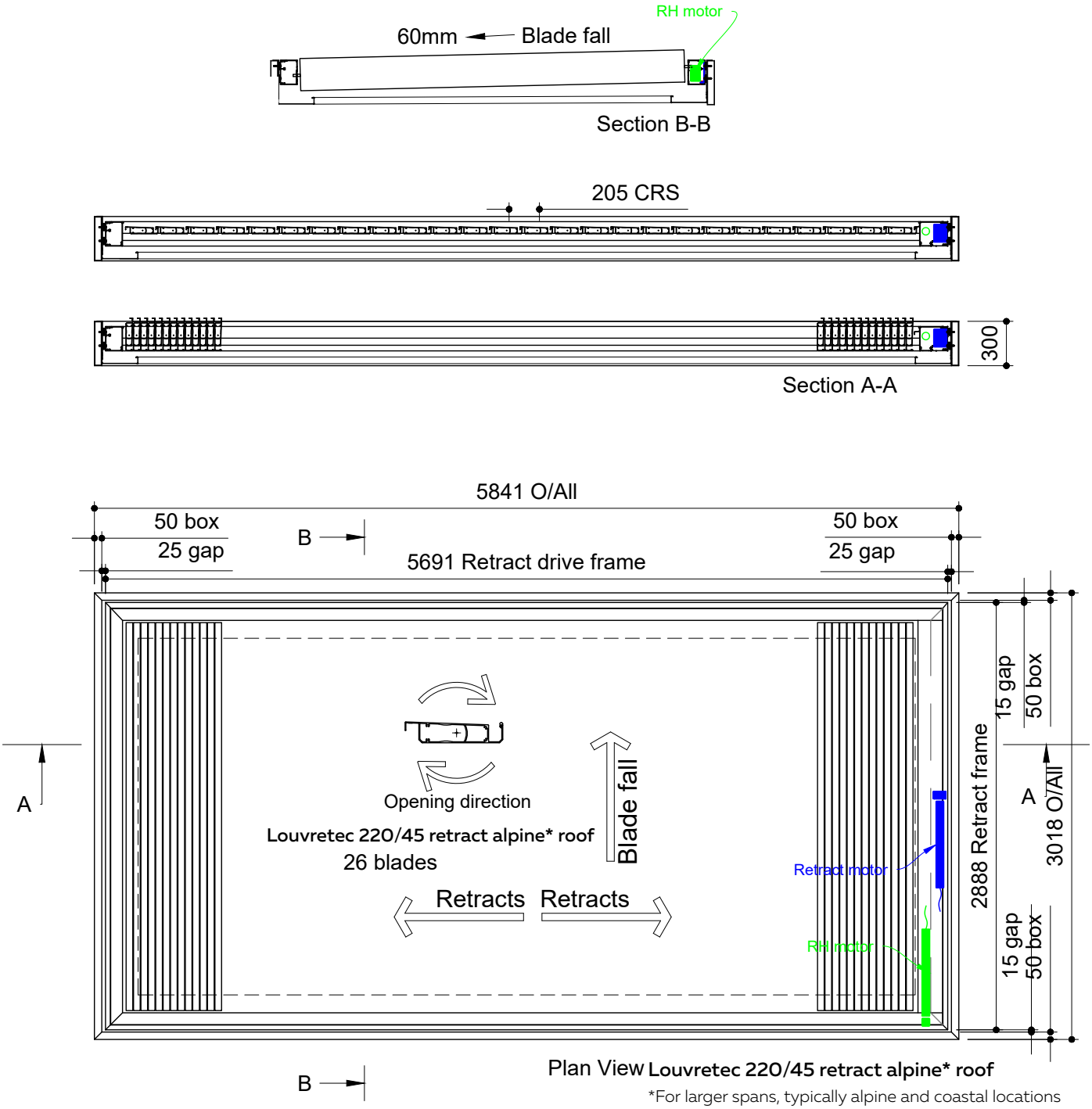

EXAMPLE: 26 BLADES, 4 SIDED RETRACT ROOF SITTING WITHIN 300X50 ALUMINIUM STRUCTURAL FRAME. BLADES STACK EVENLY TO EACH END.

FOR RETRACT BLADE CALCULATION SHEET
REFER TO PAGE 3.31 IN THIS SECTION

©Louvretec 2025 - All Rights Reserved. Technical specifications subject to change without notice.

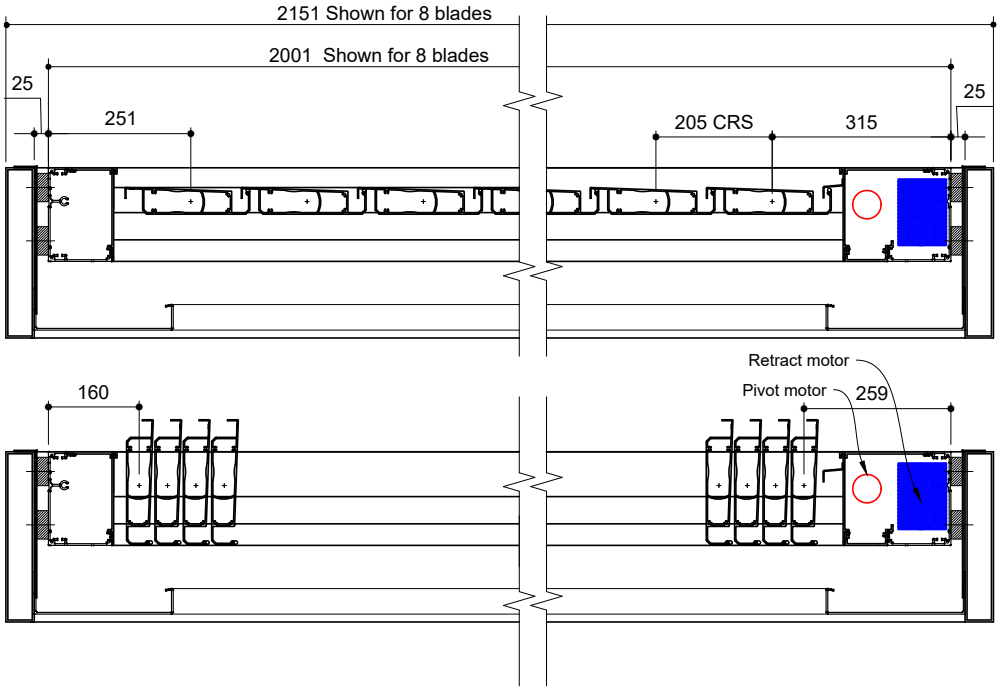

Retract module sizes with Somfy Motors			
Retract Frame 4 sides, Blades retracting to both sides, Even number			
		Fitting into frame by others	Including our 300x50 frame
No of Blades	Retract Drive & Passive Frames	Clearance +25 +25	Box Frame +50 +50
8	2001	2051	2151
10	2411	2461	2561
12	2821	2871	2971
14	3231	3281	3381
16	3641	3691	3791
18	4051	4101	4201
20	4461	4511	4611
22	4871	4921	5021
24	5281	5331	5431
26	5691	5741	5841
28	6101	6151	6251
30	6511	6561	6661
32	6921	6971	7071

©Louvretec 2025 – All Rights Reserved. Technical specifications subject to change without notice.

TYPICAL DETAIL : 4 SIDED DOUBLE RETRACT WITH MID BEAM WITHIN 300X50 ALUMINIUM STRUCTURAL FRAME BLADES STACK EVENLY OR UNEVENLY TO EACH END

DOUBLE RETRACT ROOF SHOWN WITH MID BEAM

FOR MID BEAM DETAIL REFER TO PAGE 3.32-35 IN THIS RETRACT ROOF SECTION

Blades close onto flashings, no mid gutter required.

Example shows 300x50 aluminium frame – discuss job-specific frame details with Louvretec. Weather induced frame contraction and expansion can occur over large spanning measurements.

Max length: 64 blades, 13734mm

BLADES ARE END STACKED AND CAN BE EITHER EVEN OR UNEVEN NUMBER IN EITHER ROOF.

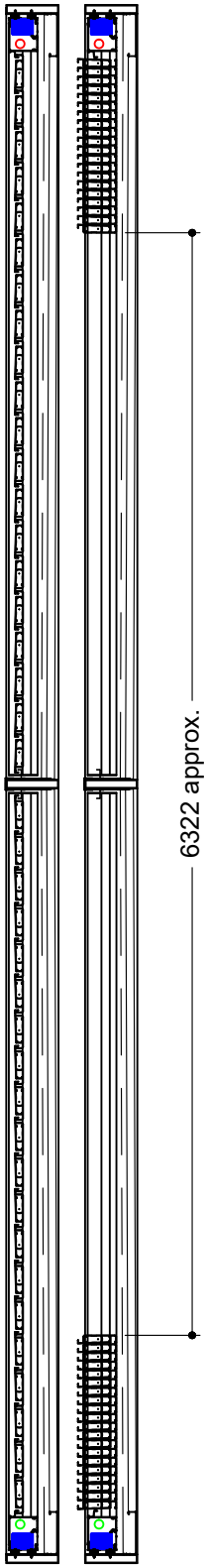

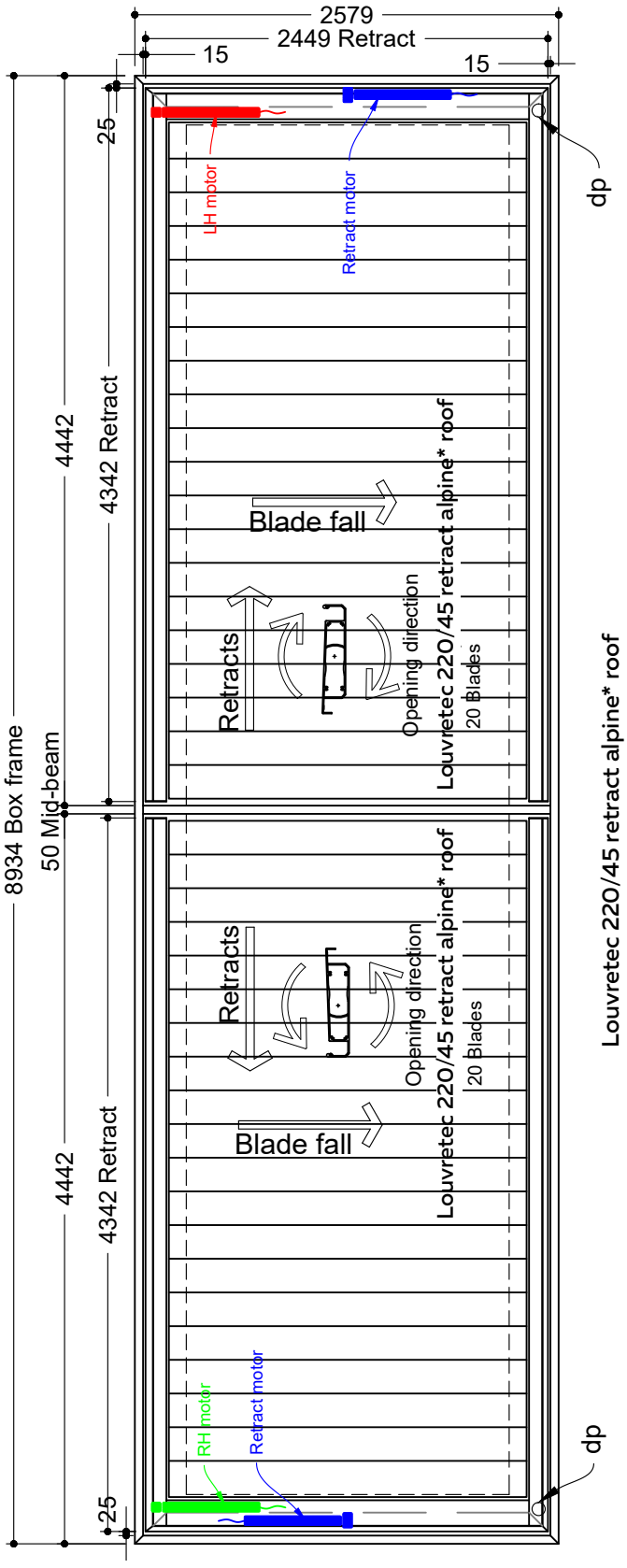

EXAMPLE:
40 BLADE, 4 SIDED DOUBLE RETRACT WITH MID BEAM, SITTING WITHIN 300X50ALUMINIUM BOX SECTION FRAME.

FOR RETRACT BLADE CALCULATIONS SHEETS REFER TO PAGE 3.35 IN THIS RETRACT ROOF SECTION

CONTACT LOUVRETEC FOR NON MID-BEAM OPTION

©Louvretec 2025 - All Rights Reserved. Technical specifications subject to change without notice.

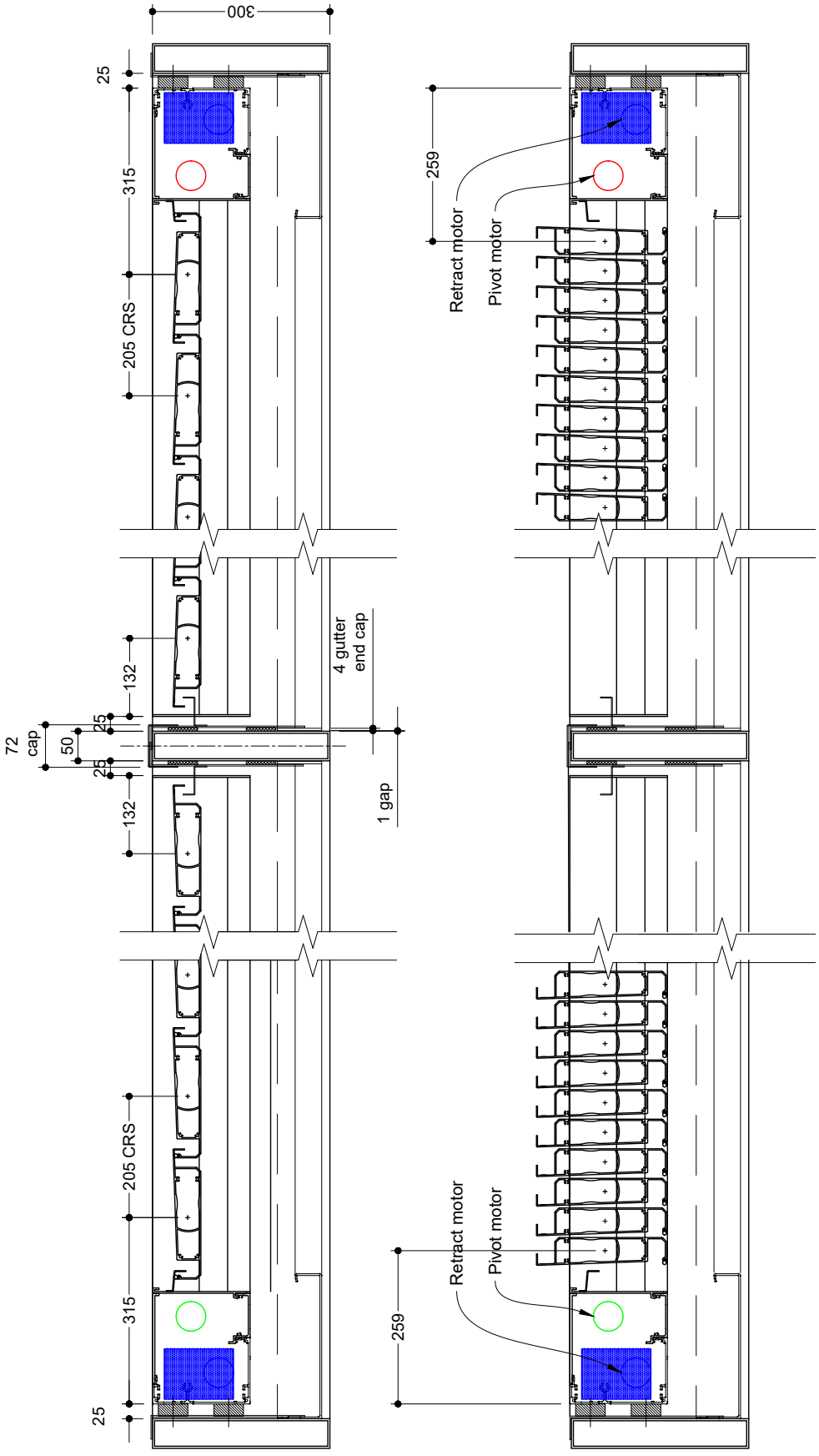

CONTACT LOUVRETEC FOR NON MID-BEAM OPTION

©Louvretec 2025 – All Rights Reserved. Technical specifications subject to change without notice.

BLADE AND FRAME CLEARANCES: 4 SIDED DOUBLE RETRACT ROOF WITH MID BEAM AND 300X50 ALUMINIUM STRUCTURAL FRAME

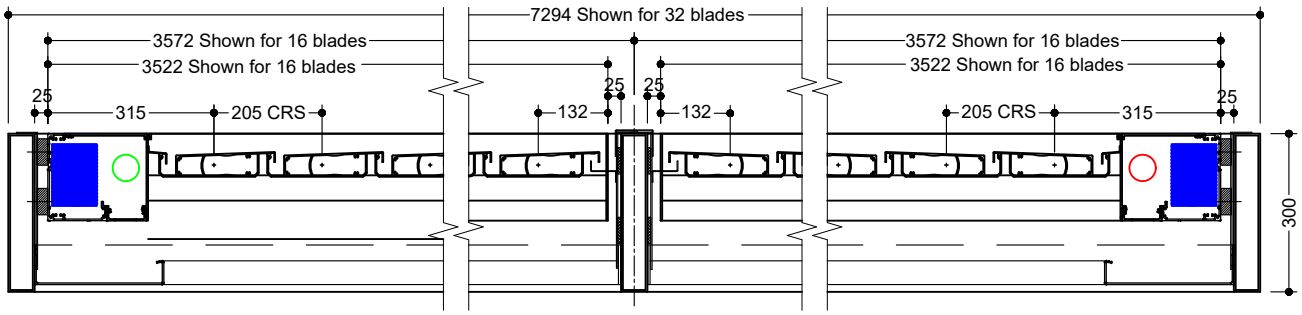

Section A-A, Blades Extended

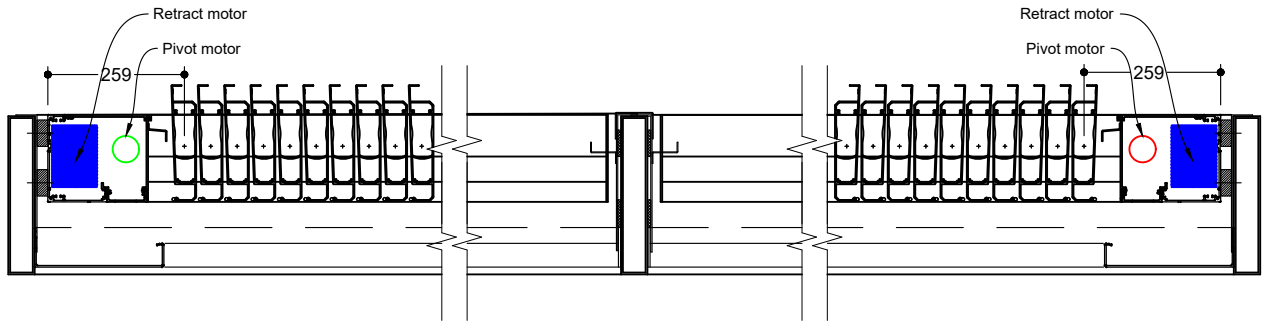

Section A-A, Blades Retracted

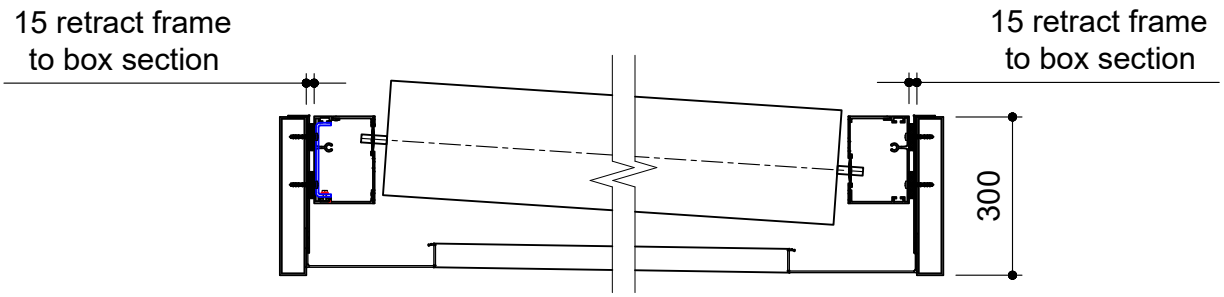

Section B-B

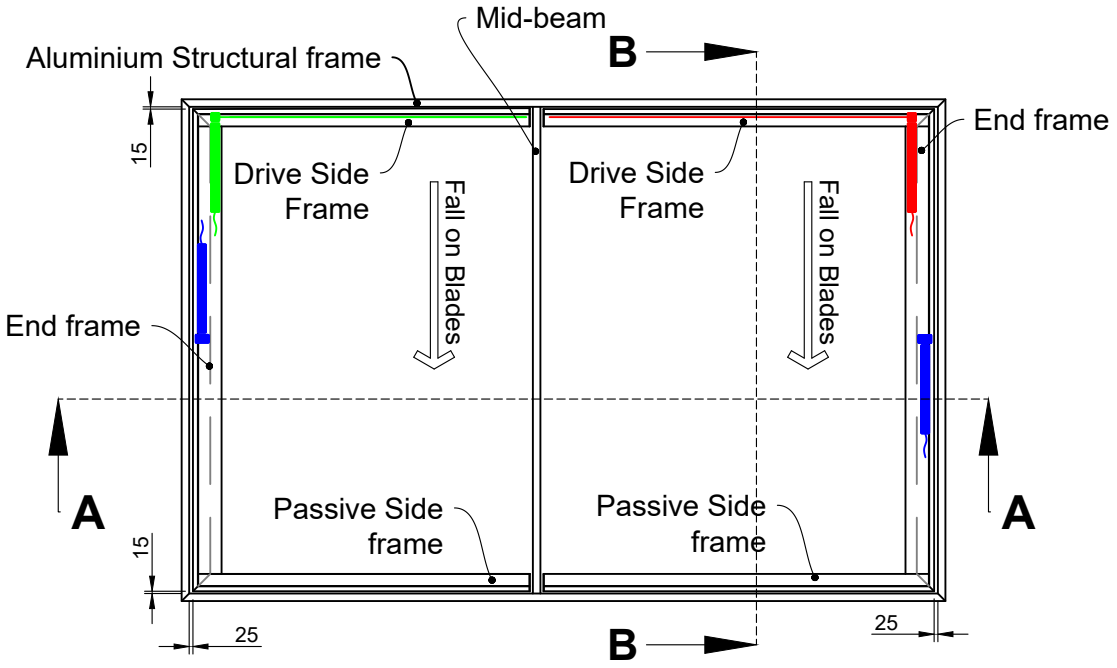

CONTACT LOUVRETEC FOR NON MID-BEAM OPTION

FILE: RETRACT 3.34 DATE MODIFIED: 01/10/2024 SCALE:

www.louvretec.co.nz www.louvretec.com.au

©Louvretec 2025 - All Rights Reserved. Technical specifications subject to change without notice.

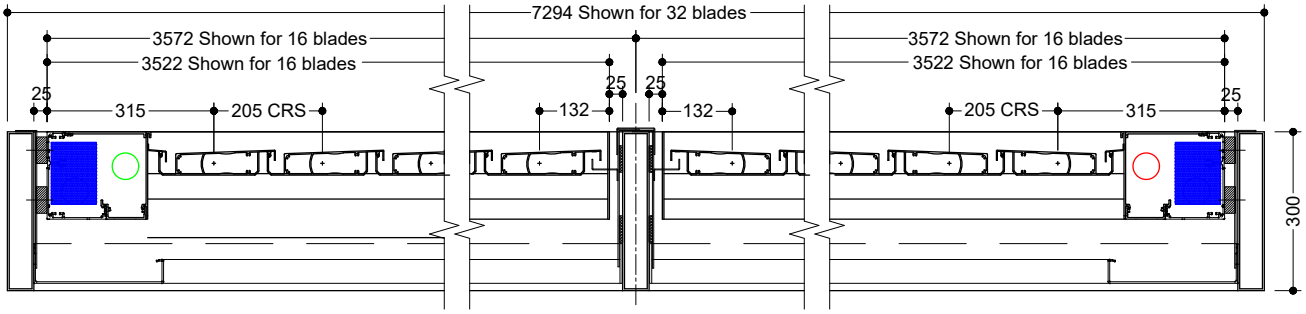

Retract module sizes with Somfy Motors

2 Retract Roofs with internal beam in-between — CONTACT LOUVRETEC FOR NON MID-BEAM OPTION

	Part A			*Part B*			*Total*	
No of Blades	Retract Drive & Passive Frames	distance to centre line of internal beam	No of Blades	Retract Drive & Passive Frames	distance to centre line of internal beam	total number of blades	Clearance (+25+25) frame by others	Box frame +50+50 Including our 300x50 frame
16	3522	3572	16	3522	3572	32	7194	7294
17	3727	3777	16	3522	3572	33	7399	7499
17	3727	3777	17	3727	3777	34	7604	7704
18	3932	3982	17	3727	3777	35	7809	7909
18	3932	3982	18	3932	3982	36	8014	8114
19	4137	4187	18	3932	3982	37	8219	8319
19	4137	4187	19	4137	4187	38	8424	8524
20	4342	4392	19	4137	4187	39	8629	8729
20	4342	4392	20	4342	4392	40	8834	8934
21	4547	4597	20	4342	4392	41	9039	9139
21	4547	4597	21	4547	4597	42	9244	9344
22	4752	4802	21	4547	4597	43	9449	9549
22	4752	4802	22	4752	4802	44	9654	9754
23	4957	5007	22	4752	4802	45	9859	9959
23	4957	5007	23	4957	5007	46	10064	10164
24	5162	5212	23	4957	5007	47	10269	10369
24	5162	5212	24	5162	5212	48	10474	10574
25	5367	5417	24	5162	5212	49	10679	10779
25	5367	5417	25	5367	5417	50	10884	10984
26	5572	5622	25	5367	5417	51	11089	11189
26	5572	5622	26	5572	5622	52	11294	11394
27	5777	5827	26	5572	5622	53	11499	11599
27	5777	5827	27	5777	5827	54	11704	11804
28	5982	6032	27	5777	5827	55	11909	12009
28	5982	6032	28	5982	6032	56	12114	12214
29	6187	6237	28	5982	6032	57	12319	12419
29	6187	6237	29	6187	6237	58	12524	12624
30	6392	6442	29	6187	6237	59	12729	12829
30	6392	6442	30	6392	6442	60	12934	13034
31	6597	6647	30	6392	6442	61	13139	13239
31	6597	6647	31	6597	6647	62	13344	13444
32	6802	6852	31	6597	6647	63	13549	13649
32	6802	6852	32	6802	6852	64	13754	13854

©Louvretec 2025 – All Rights Reserved. Technical specifications subject to change without notice.

Louvretec 220 retract slimline roof - Stack dimensions when blades fully retracted

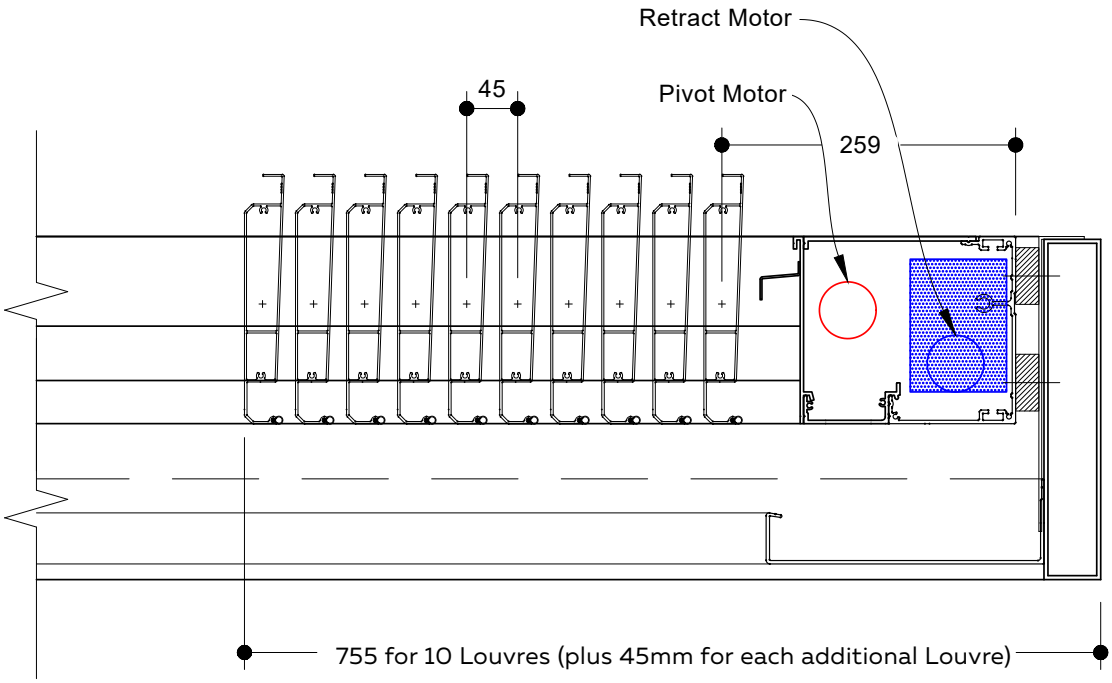

Louvretec 220/45 retract alpine* roof - Stack dimensions when blades fully retracted

*For larger spans, typically alpine and coastal locations

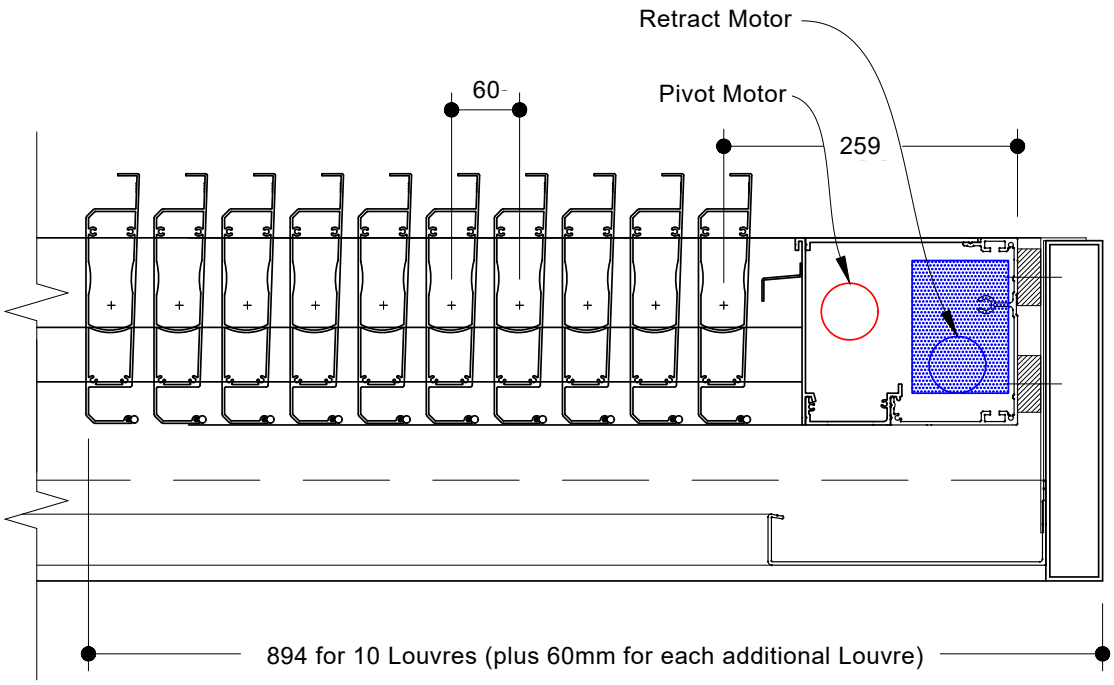

FILE: RETRACT 3.36 DATE MODIFIED: 01/10/2026 SCALE:

www.louvretec.co.nz www.louvretec.com.au

©Louvretec 2025 - All Rights Reserved. Technical specifications subject to change without notice.



NOON DUO CONTROLLER BY TELECO/SOMFY – A CUSTOM PROGRAMMED RETRACT ROOF CONTROLLER.

REMOTE CONTROLLER

Custom programmed

The Louvretec customised Noon Duo Retract Remote Controller has 11 channels which enables 11 different Louvretec products to be programmed on to the remote control.

This one remote is a sophisticated solution for installations that feature both Teleco and Somfy receivers, such as Retractable Roof & Motorised Blinds.

A demonstration of the remote control is given to each customer along with an easy to follow customised remote control instruction card.

Retractable Roofs can be operated from a Smartphone - please ask your Louvretec Dealer for the latest options.

ELECTRICAL DETAILS

Electrical information

Refer Electrical Wiring Details Section 14 to view Electrical Wiring Diagrams



REFER TO SECTION 14: ELECTRICAL WIRING DIAGRAMS

©Louvretec 2025 – All Rights Reserved. Technical specifications subject to change without notice.

RETRACT AFTER SALES CARE & WARRANTY

Operating instructions, Warranty and care

On completion of a Louvretec Retract Roof the owner is provided with a Retract Warranty that also contains information such as operating instructions & care and cleaning advice.

A Retract Roof is a high value item that benefit's from regular servicing. Louvretec Retracts are designed to an exacting standard, incorporating the very latest in Retract technology.
Retracting Louvre systems means more moving parts - these will require regular cleaning, servicing and protective maintenance to keep your Retract system in good working order.



Regular servicing every 12 months

We recommend a regular maintenance service on a twelve month basis.
Some Louvretec Dealerships also offer a full valet cleaning service. Check with your local Dealer to see if this service is available.
Please refer to the Retract Warranty regarding general care, cleaning, key points regarding safe operation of the Retract System, along with the full Product Warranty.


LOUVRETEC PRODUCT WARRANTY

RETRACT ROOFS

LouvreCare

Engineered for Life

LouvreTec


LOUVRETEC PRODUCT WARRANTY

EFFECTIVE FROM NOVEMBER 2026

RETRACT ROOFS

louvretec retract

warranty details & workmanship

motorisation

product materials

powdercoat finishes

anodised finishes

fully engineered structural

cleaning

product description

louvrecare

DATE MODIFIED: 01/10/2026

©Louvretec 2025 – All Rights Reserved. Technical specifications subject to change without notice.



RETRACTED. AUCKLAND, NZ



RETRACT ROOF CLOSED. AUCKLAND, NZ

SAFE OPERATION

Any object that obstructs the path of the louvres during the rotating and/or retract/extend operation can cause damage. Objects can include but not limited to branches, bottles, broom handles, balls, tools etc.

Ensure gutters and surrounding areas are free of any objects before operating.

EASE OF OPERATION

IN HIGH WINDS IT IS RECOMMENDED NOT TO USE THE RETRACT MODE. THE FORCE OF THE WIND ON THE LOUVRE BLADE WHEN RETRACTING CAN AFFECT THE MOVEMENT OF THE LOUVRE BLADES.

IN HIGH WINDS WE RECOMMEND HAVING THE LOUVRES PARKED IN THE FULLY CLOSED POSITION. HIGH WINDS CAN CAUSE THE LOUVRE BLADES TO RATTLE AGAINST EACH OTHER WHEN RETRACTED BACK.

- The Retract Roof remote has preset keys to rotate/tilt the louvres to 45°, 90° & 135°. By pressing the key a second time will stop the louvres at any point in between the above tilt angles.
- When in retracting mode the roof the louvres will always go to 90° before retracting back.
- Once the louvres have moved from the fully retracted position, the louvres will automatically close. Simply rotate them open and close (just like a standard Opening Roof) for operable shelter when they are fully returned.
- A rain sensor option is available. The rain sensor is activated by detecting drops of water. When activated the remote unit will move the roof to the extended position and close the louvres.
- The remote unit executes no further commands until 20 seconds after the sensor no longer detects any drops.
- Lighting & heating options can also be operated on the Retract's remote control unit.

INSTALLATION NOTE:
Take care, never install a flashing over the motor, end frame, drive and passive frame covers.

©Louvretec 2025 – All Rights Reserved. Technical specifications subject to change without notice.

LOUVRETEC PRODUCT WARRANTY

RETRACT ROOFS

The Louvretec range of products:

All Louvretec branded products are designed and engineered in Australia & New Zealand by Louvretec to comply with relevant AS/NZS standards - refer to full Louvretec Engineering data Design Manual 2025 Section 13.

Louvretec has the most extensive range of outdoor sun shading/ outdoor living products available in Australasia, backed by a comprehensive network of Louvretec Dealers.

Most Louvretec products sold in Australia are made in Australia*

Most Louvretec products sold in New Zealand are made in New Zealand*

*Some specialised products may only be made in Australia or in NZ and are shipped between each country.

The Authorised Louvretec Dealer Network:

Your Louvretec product will have been supplied and installed by your local Authorised Louvretec Dealer. All Louvretec Dealerships are privately owned, and the same Louvretec Dealer who supplied your Louvretec will also service your Louvretec.

Your Louvretec product has been "Engineered for Life" and we are committed to ensuring that happens.

Louvrecare:

Preventative maintenance and valet. Regular scheduled servicing by a Louvrecare team has real benefits. Louvrecare can vary between Dealerships - consult your local Louvretec Dealer.

LouvreCare
PREVENTATIVE MAINTENANCE & VALET









Engineered for Life

LouvreTec®
OPENING & RETRACT ROOFS / SUN LOUVRES / SHUTTERS

©Louvretec 2025 – All Rights Reserved. Technical specifications subject to change without notice.

LOUVRETEC PRODUCT WARRANTY

EFFECTIVE FROM NOVEMBER 2026

RETRACT ROOFS

louvretec retract

LouvreTec

HEAD OFFICE:
23c Douglas Alexander Pde, Albany, Auckland, New Zealand
T: +64 9 415 4949 E: info@louvretec.co.nz

warranty details & workmanship — 2 YEARS

All Retract Roofs installed by Louvretec, or an Authorised Louvretec Installer, is from date of invoice, fully warranted for the first two years. This warranty covers workmanship, louvres and all componentry, motors, switches and electronics with labour costs included. From year two to end of year five, a warranty 'replacement of parts' only applies for all motors. Labour costs excluded (also excludes any wiring and electrical connections by others).

motorisation — 5 YEARS

Louvretec exclusively uses Somfy motors. Somfy offers a 5 year warranty on all motors and electronics. Please contact your Louvretec Dealer or Somfy for a complete list of all terms and conditions.

product materials

All aluminium louvres and extrusions used in Louvretec's systems are manufactured in an ISO9002 quality assured environment to AS1866 & AS3902 standards. Marine grade T316 stainless steel is used for drive axles, with stainless steel componentry fixings being standard. Plastic injected moulded componentry is all UV stabilised.

powdercoat finishes — 15 YEARS

A wide range of exterior powder coat finishes are available. Different finishes carry different warranties, from 10 – 25 years, but is no less than 10years for Duralloy. Duralloy® +PLUS or equivalent is the standard finish supplied unless stated otherwise and this carries a 15 year film and colour integrity warranty as per the Dulux Powder and Industrial Coatings Warranty. If your project has used the Duratec powdercoat range please refer to the Dulux Powder and Industrial Coatings Warranty wording.

anodised finishes — 10 YEARS

The current specifications re anodised aluminium range from 12-20-25 microns depth. The greater the microns the better the protection. With regular cleaning anodised material will retain its original integrity for no less than 10 years.

fully engineered

Our louvre systems are designed to conform to New Zealand and Australian standards wind loadings. Full engineering details available on request.

structural — 15 YEARS

The aluminium structure of your Opening Roof, Sun Louvre, and or Shutter system including the aluminium frame, beams, posts, and louvre blades, will be free from defects in materials that affect structural integrity for 15 years from the date of installation. What this covers: If the structure fails during the warranty period, Louvretec will, at its option, repair or replace the affected structure. Conditions: This warranty applies where the system has been installed by an Authorised Louvretec Dealer in accordance with our installation specifications and relevant building codes, and has been maintained in line with the Louvretec care and maintenance guide. What's not covered: Damage caused by misuse, accident, modification, or unauthorised repairs; storm, flood, or other events beyond design wind and load ratings; improper installation by non-authorised parties; normal wear and tear; and cosmetic changes such as minor weathering or colour variation.

cleaning

1. Periodic cleaning is essential to remove dirt, grime and associated salt deposits from both powder coated and anodised surfaces.
2. Carefully remove any loose deposits with a wet sponge.
3. Use a soft non-abrasive brush and a mild household detergent or car cleaning solution to remove dust, salt and other deposits. Rinse well with clean water.
4. If your Retract roof downpipe connects to tank water supply be sure to dis-connect before cleaning.
5. Most importantly – USE REGULARLY! We recommend at least once every two weeks.

Like a car, in order to keep it under warranty it must be regularly serviced by your authorised Louvretec Dealer.

product description

_____

_____

louvrecare

Louvrecare is a planned preventative maintenance and valet service designed to keep your Louvretec product clean and in good working order. Contact your Louvretec Dealer for full details.

LouvreCare
PREVENTATIVE MAINTENANCE & VALET

©Louvretec 2025 – All Rights Reserved. Technical specifications subject to change without notice.