



EVERYTHING HAS A FLOW TO THE OUTDOORS
BY LOUVRETEC CANTERBURY



Louvretec 220/45 opening alpine* roof blade

- Due to it's extended span capabilities, a 20x3 end cap connecting bar is fitted below the blade to eliminate any individual blade movement in extreme conditions
- Available Spiral Pivot Opening Roof or Retract Roof

SPIRAL PIVOT RETRACT

Louvretec 220/45 opening alpine* roof

**For larger spans, typically alpine and coastal locations*

An award winning, multi-purpose Louvre blade compatible as a Spiral Pivot or Retract Roof.

The award winning Louvretec 220/45 opening alpine* roof features a multi-purpose roof blade compatible as a Spiral Pivot or a Retract Roof. This Opening Roof leads the way with outstanding spanning capabilities, ideal for high wind zone and alpine regions.

Key Features

- Winner of the Window Shading Association of Australia (WSAA) Product Innovation Award, 2026
- Each blade top-tapers to 45mm high
- Blade is compatible as a Spiral Pivot or Retract Roof
- *For larger spans, typically alpine and coastal locations
- Sleek, functional design, clean and uncluttered when open or closed
- Design strength of an extruded double box-section
- Available Motorised using Somfy Motorisation, or hand-operated
- Features our award winning Spiral Pivot drive system, keeping mechanisms hidden
- "Cushion Closing" onto an external sun-resistant PVC bulb seal
- Increased closing cover angle for added weather protection
- Larger blade gutter incorporated for extra storm-water dispersal
- This Roof is a larger spanning version of the Louvretec 220 opening slimline roof

MOTORISED OR HAND OPERATED

Controller and Sensor Options Refer Pages 2.17 - 2.18 for range of options





SURFACE FINISHING OPTIONS

A wide range of options are available.

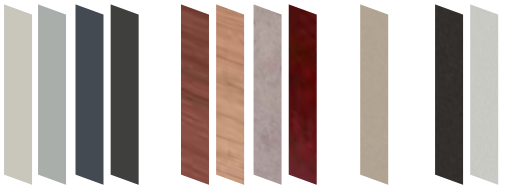

POWDERCOAT | WOODGRAIN & SPECIAL FINISHES | METALLIC | ANODISED

©Louvretec 2025 - All Rights Reserved. Technical specifications subject to change without notice.



BLADE SPECIFICATIONS Louvretec 220/45 opening alpine* roof blade (Retract compatible)

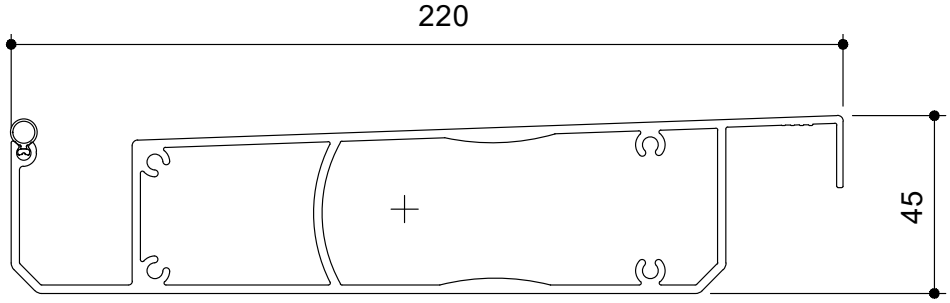

*For larger spans, typically alpine and coastal locations NTS

BLADE SPECIFICATIONS			
Blade cover - opening system	205 mm	Weight per linear metre - opening system	3.74 kg/lm
Weight per square metre - opening system	18.2 kg/sqm	Actual blade width	220 mm
Blade centres - opening system	205 mm		

SPANS AT A GLANCE

Refer Engineering Section. Climate, terrain, shielding, location, type of structure contribute to determine spans.

WIND ZONE	INSIDE	LOW	MEDIUM	HIGH	VERY HIGH	EXTRA HIGH
Factored wind speed at building	Self wt	32 m/s	37m/s	44 m/s	50 m/s	55 m/s
		115 km/hr	133 km/hr	158 km/hr	179 km/hr	198 km/hr
Louvretec 220/45 opening alpine* roof **3m Height**	5000	5000	5000	5000	5000	5000
Louvretec 220/45 opening alpine* roof **6m Height**		5000	5000	5000	5000	4700

INSTALLATION OPTIONS

CHOOSE DIRECTION OF BLADE PIVOT

LEFT HAND UP

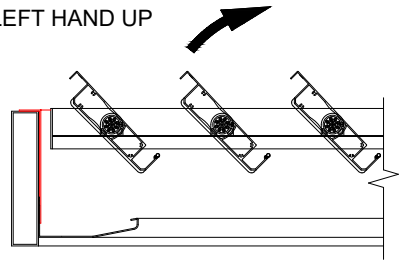

RIGHT HAND UP

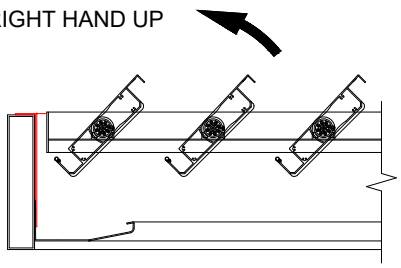

CALCULATE OPTIMUM FRAME OPENING SIZES FOR SPIRAL PIVOT

Span: Check engineering span limits

Pivot: Calculation example showing 17 blades

STEP 1

16 blades x 205 Crs	3280
1 blade at 220 (blade size)	+ 220
17 blades	= 3500

STEP 2

Blade cover	3500
+2/22mm clearance @ ends	+ 44
Total exact pivot length	= 3544

Extra width 185mm gutter provides cover if clearance increases over 22mm at ends.

Blade direction either right hand up or left hand up.

©Louvretec 2025 – All Rights Reserved. Technical specifications subject to change without notice.

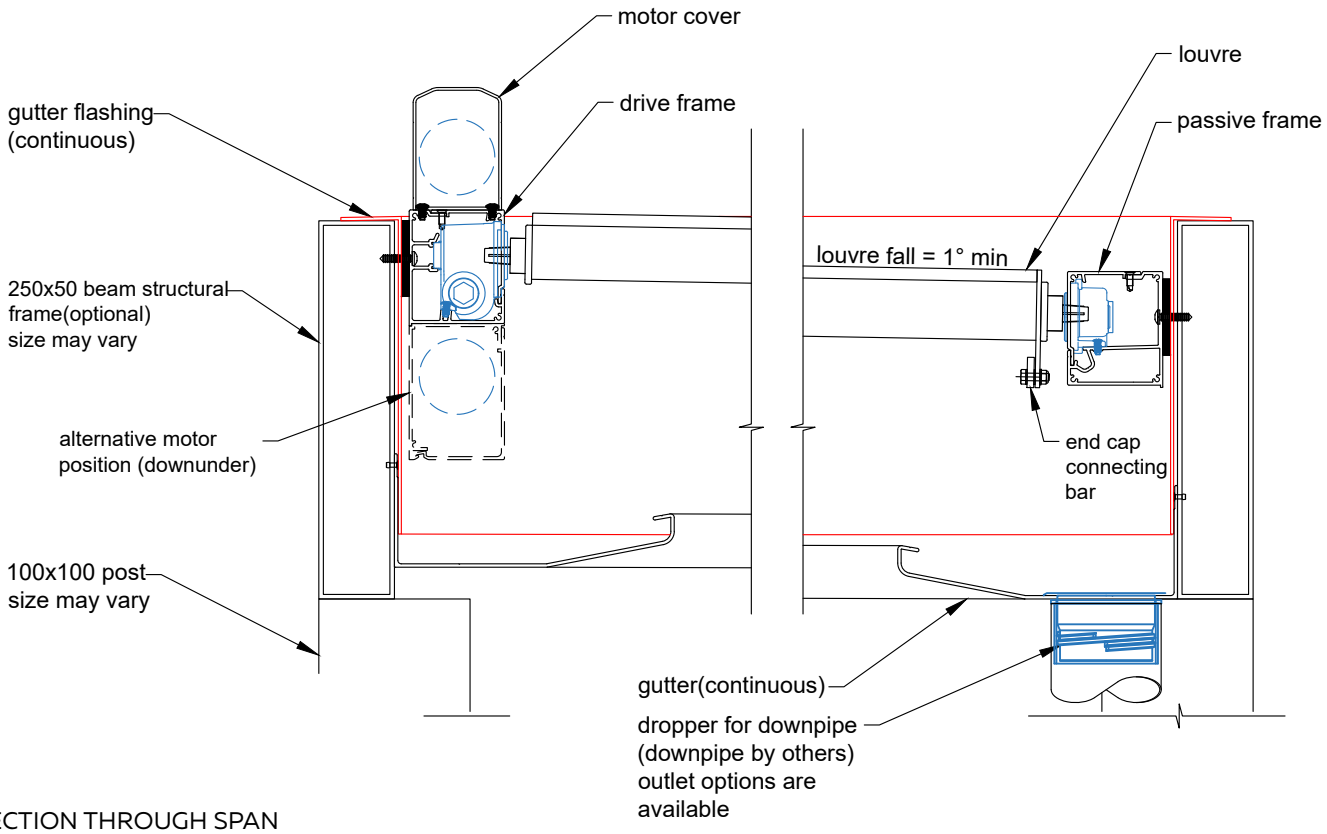

SECTION THROUGH SPAN

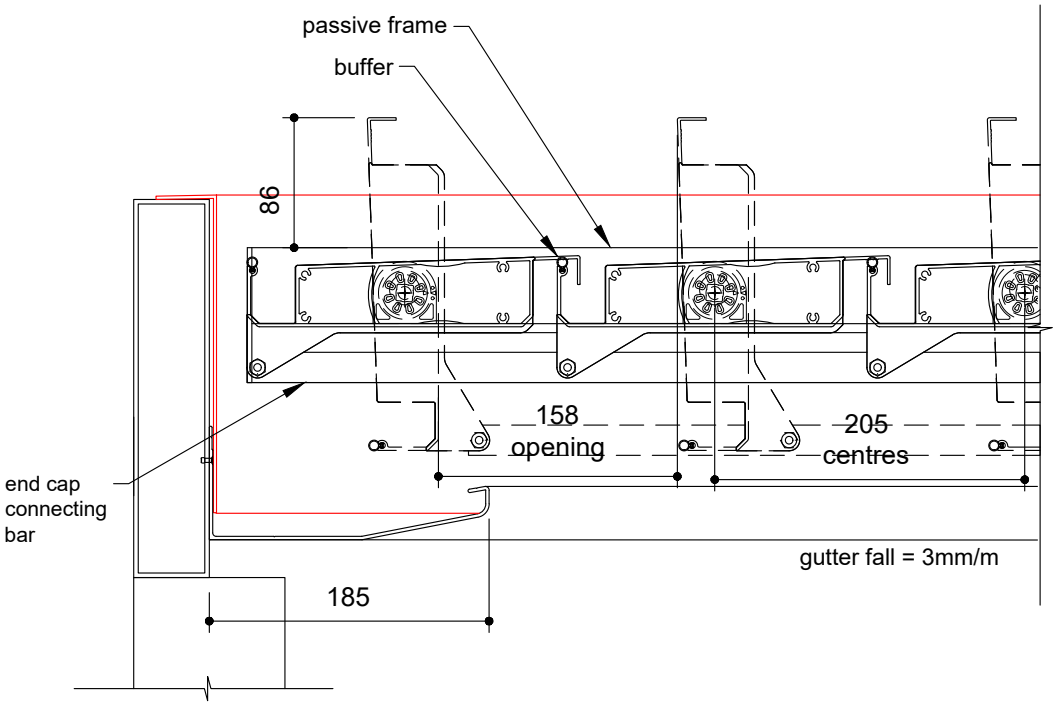

SECTION THROUGH LOUVRES

©Louvretec 2025 – All Rights Reserved. Technical specifications subject to change without notice.

TYPICAL DETAIL : Manual Louvretec 220/45 opening alpine* roof, within Louvretec structural frame

*For larger spans, typically alpine and coastal locations

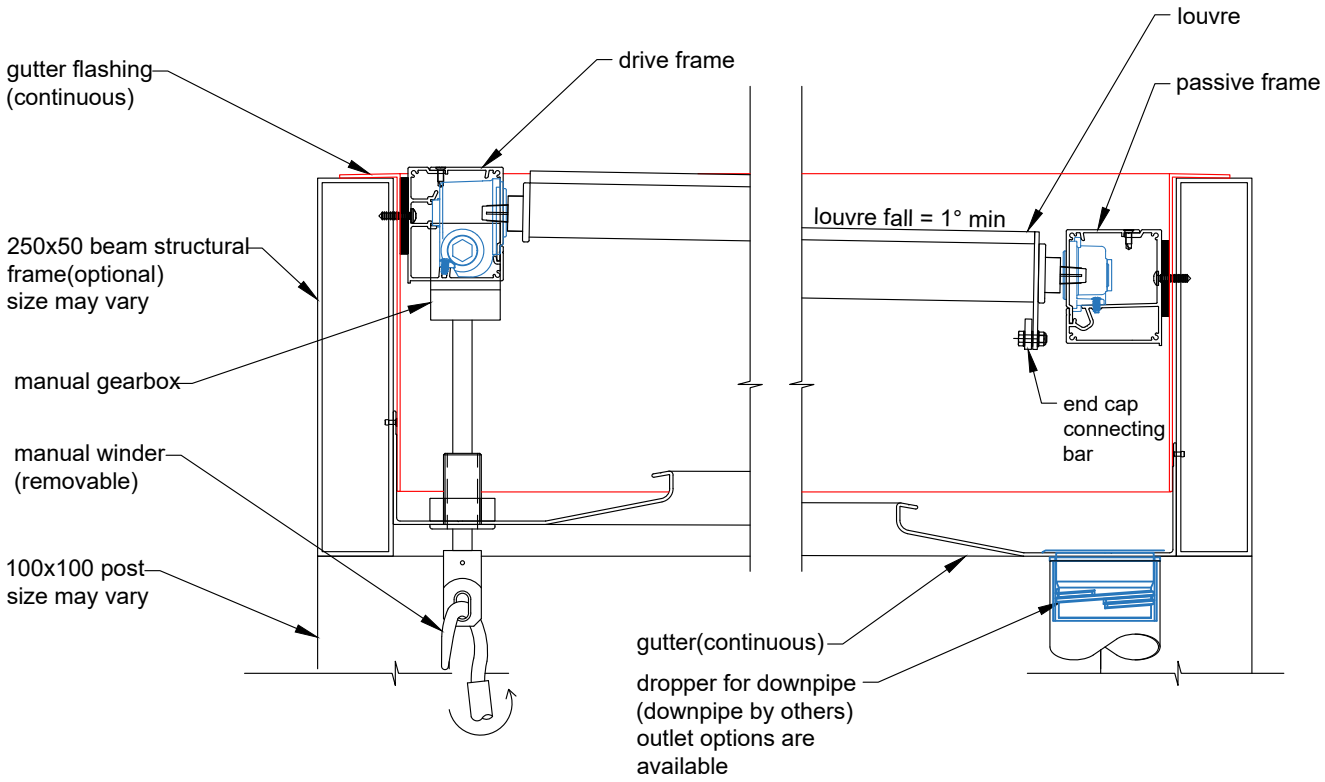

SECTION THROUGH SPAN

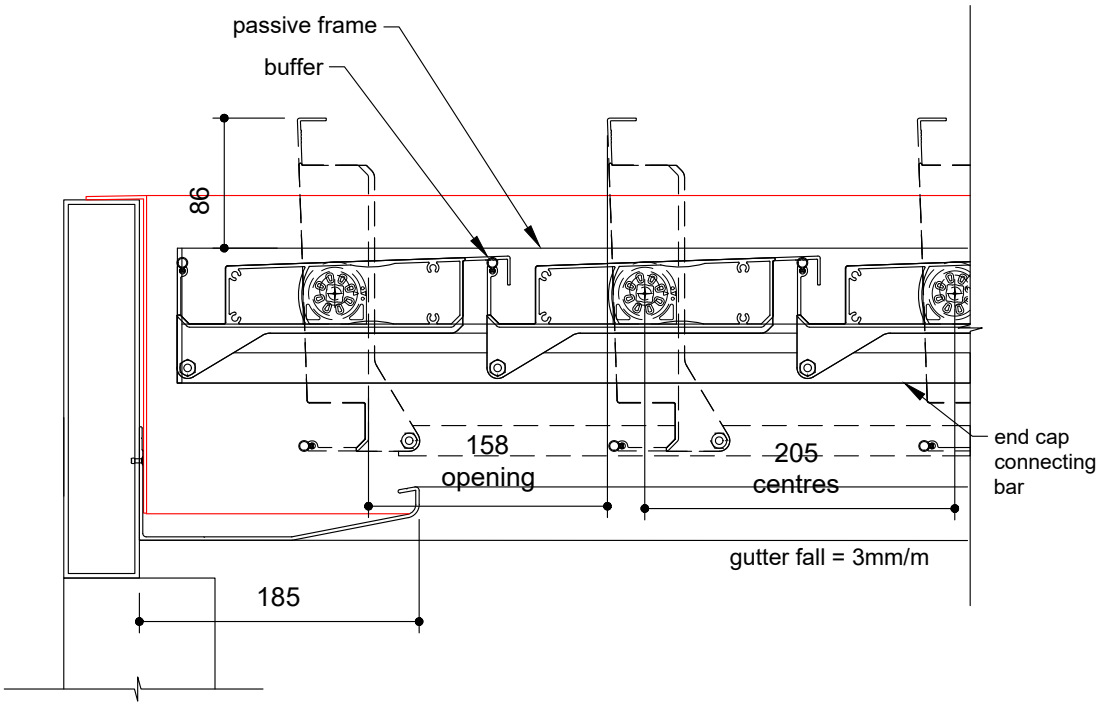

SECTION THROUGH LOUVRES

FILE: OPENING ROOFS 2.34 DATE MODIFIED: 01/10/2026 SCALE:

www.louvretec.co.nz www.louvretec.com.au

©Louvretec 2025 - All Rights Reserved. Technical specifications subject to change without notice.