TYPICAL DETAIL : 4 SIDED DOUBLE RETRACT WITH MID BEAM WITHIN 300X50 ALUMINIUM STRUCTURAL FRAME BLADES STACK EVENLY OR UNEVENLY TO EACH END

DOUBLE RETRACT ROOF SHOWN WITH MID BEAM

FOR MID BEAM DETAIL REFER TO PAGE 3.32-35 IN THIS RETRACT ROOF SECTION

Blades close onto flashings, no mid gutter required.

Example shows 300x50 aluminium frame – discuss job-specific frame details with Louvretec. Weather induced frame contraction and expansion can occur over large spanning measurements.

Max length: 64 blades, 13734mm

BLADES ARE END STACKED AND CAN BE EITHER EVEN OR UNEVEN NUMBER IN EITHER ROOF.

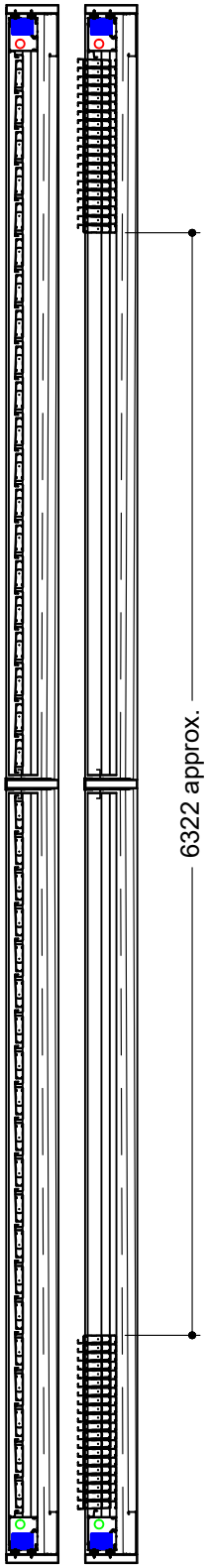

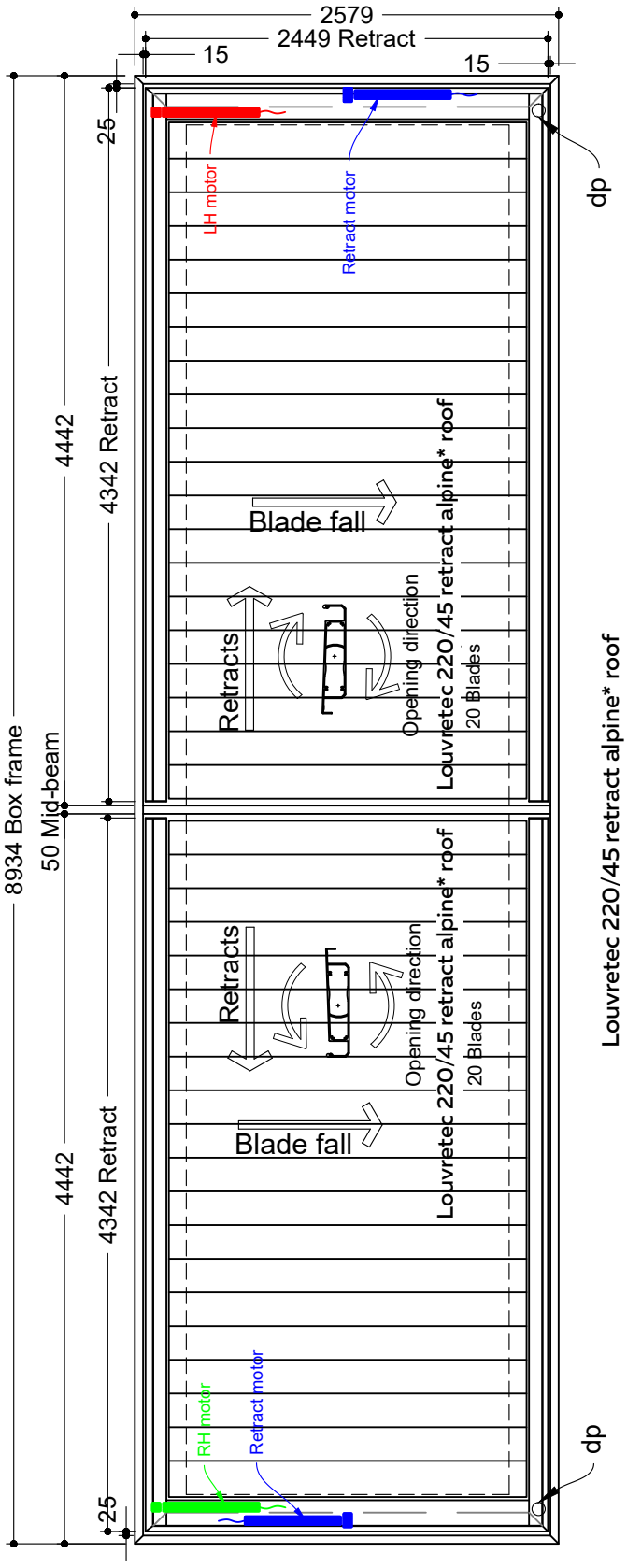

EXAMPLE:
40 BLADE, 4 SIDED DOUBLE RETRACT WITH MID BEAM, SITTING WITHIN 300X50ALUMINIUM BOX SECTION FRAME.

FOR RETRACT BLADE CALCULATIONS SHEETS REFER TO PAGE 3.35 IN THIS RETRACT ROOF SECTION

CONTACT LOUVRETEC FOR NON MID-BEAM OPTION

©Louvretec 2025 - All Rights Reserved. Technical specifications subject to change without notice.

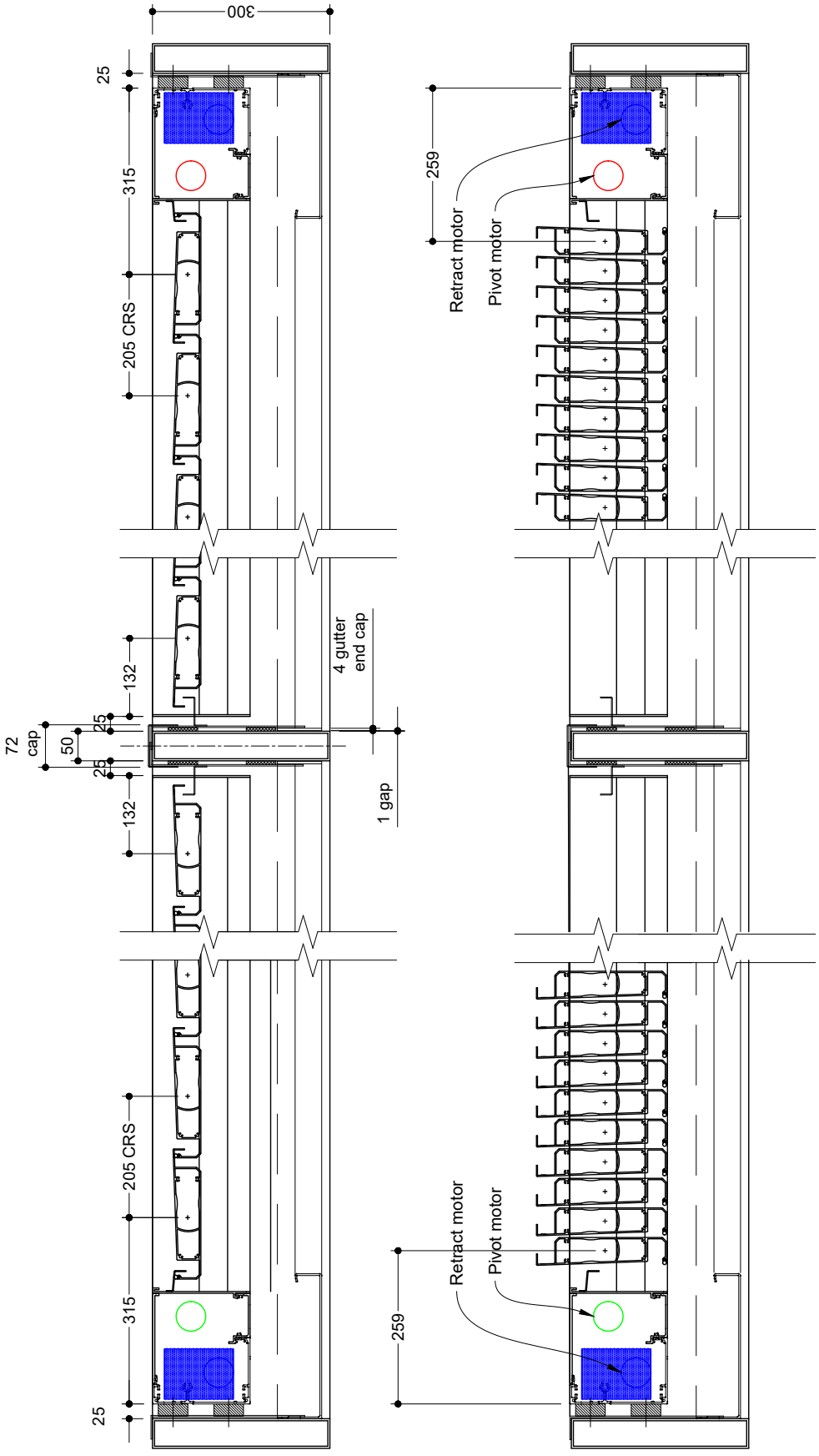

CONTACT LOUVRETEC FOR NON MID-BEAM OPTION

©Louvretec 2025 – All Rights Reserved. Technical specifications subject to change without notice.

BLADE AND FRAME CLEARANCES: 4 SIDED DOUBLE RETRACT ROOF WITH MID BEAM AND 300X50 ALUMINIUM STRUCTURAL FRAME

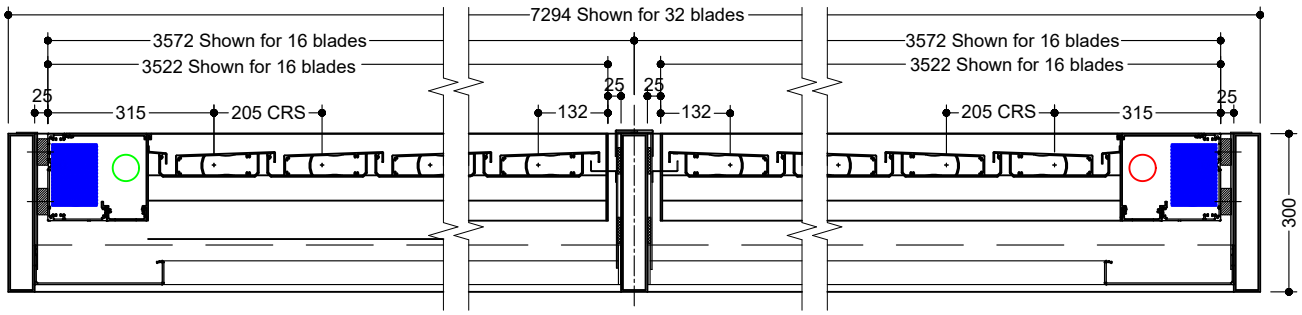

Section A-A, Blades Extended

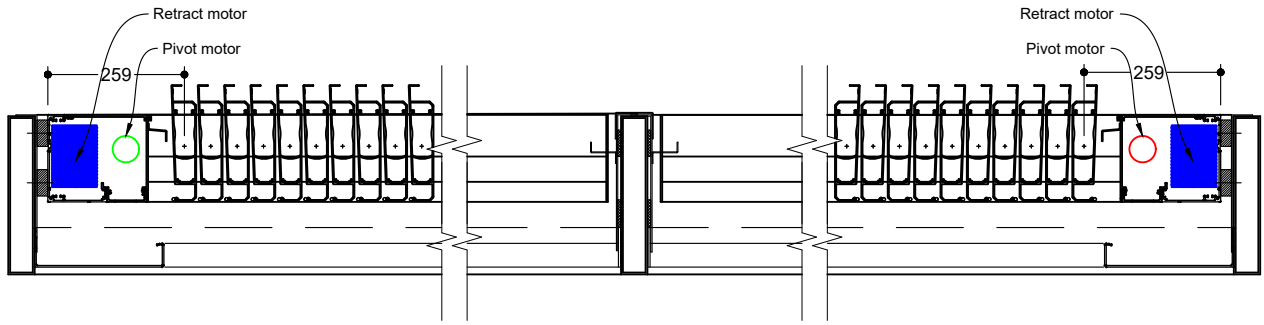

Section A-A, Blades Retracted

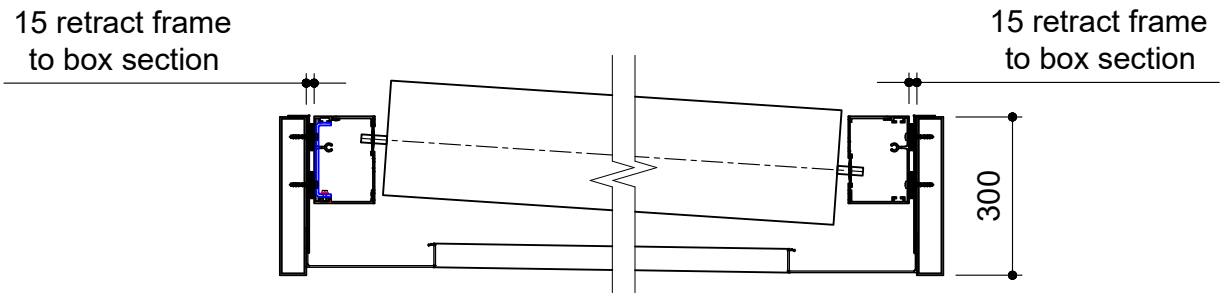

Section B-B

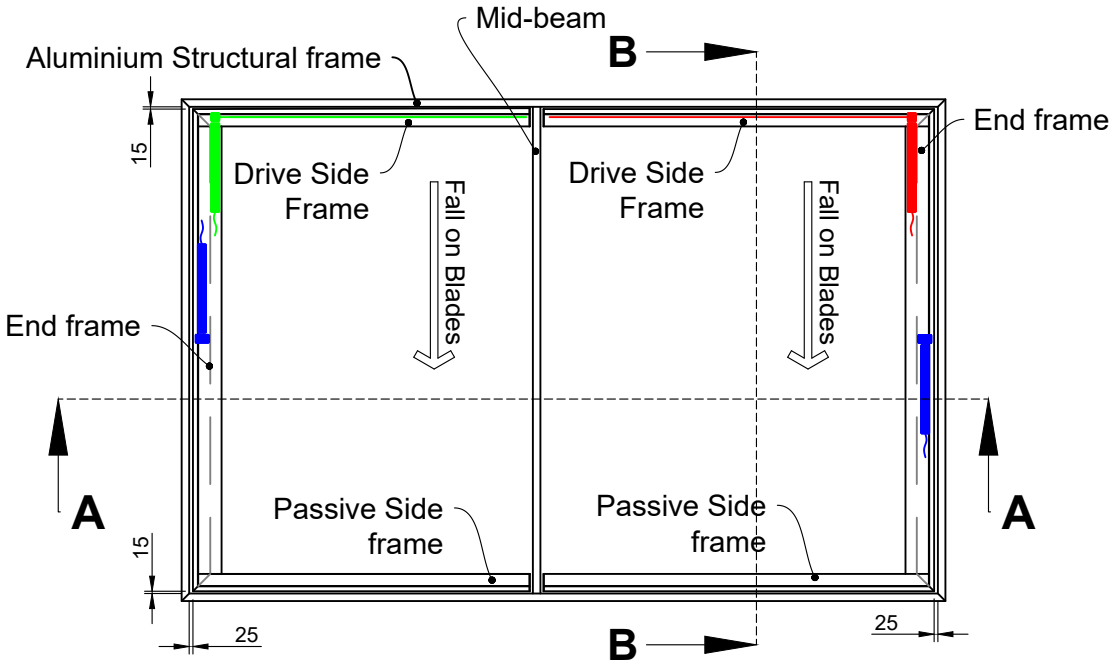

CONTACT LOUVRETEC FOR NON MID-BEAM OPTION

FILE: RETRACT 3.34 DATE MODIFIED: 01/10/2024 SCALE:

www.louvretec.co.nz www.louvretec.com.au

©Louvretec 2025 - All Rights Reserved. Technical specifications subject to change without notice.

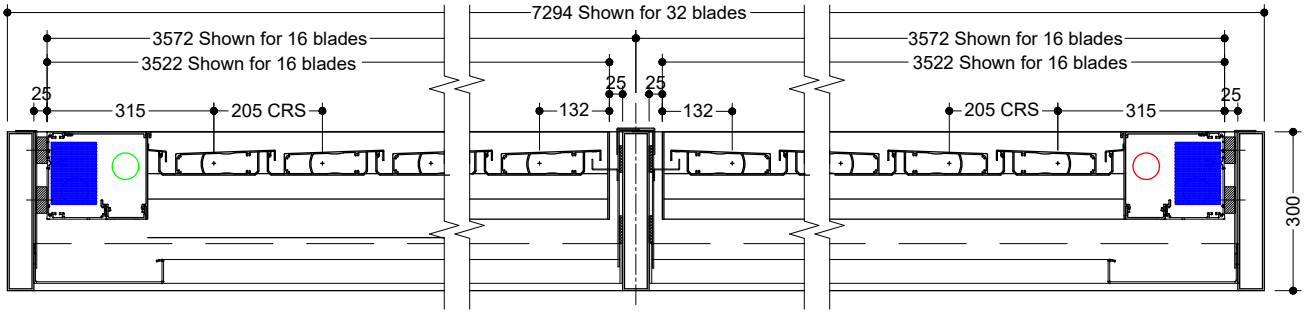

Retract module sizes with Somfy Motors

2 Retract Roofs with internal beam in-between — CONTACT LOUVRETEC FOR NON MID-BEAM OPTION

	Part A			*Part B*			*Total*	
No of Blades	Retract Drive & Passive Frames	distance to centre line of internal beam	No of Blades	Retract Drive & Passive Frames	distance to centre line of internal beam	total number of blades	Clearance (+25+25) frame by others	Box frame +50+50 Including our 300x50 frame
16	3522	3572	16	3522	3572	32	7194	7294
17	3727	3777	16	3522	3572	33	7399	7499
17	3727	3777	17	3727	3777	34	7604	7704
18	3932	3982	17	3727	3777	35	7809	7909
18	3932	3982	18	3932	3982	36	8014	8114
19	4137	4187	18	3932	3982	37	8219	8319
19	4137	4187	19	4137	4187	38	8424	8524
20	4342	4392	19	4137	4187	39	8629	8729
20	4342	4392	20	4342	4392	40	8834	8934
21	4547	4597	20	4342	4392	41	9039	9139
21	4547	4597	21	4547	4597	42	9244	9344
22	4752	4802	21	4547	4597	43	9449	9549
22	4752	4802	22	4752	4802	44	9654	9754
23	4957	5007	22	4752	4802	45	9859	9959
23	4957	5007	23	4957	5007	46	10064	10164
24	5162	5212	23	4957	5007	47	10269	10369
24	5162	5212	24	5162	5212	48	10474	10574
25	5367	5417	24	5162	5212	49	10679	10779
25	5367	5417	25	5367	5417	50	10884	10984
26	5572	5622	25	5367	5417	51	11089	11189
26	5572	5622	26	5572	5622	52	11294	11394
27	5777	5827	26	5572	5622	53	11499	11599
27	5777	5827	27	5777	5827	54	11704	11804
28	5982	6032	27	5777	5827	55	11909	12009
28	5982	6032	28	5982	6032	56	12114	12214
29	6187	6237	28	5982	6032	57	12319	12419
29	6187	6237	29	6187	6237	58	12524	12624
30	6392	6442	29	6187	6237	59	12729	12829
30	6392	6442	30	6392	6442	60	12934	13034
31	6597	6647	30	6392	6442	61	13139	13239
31	6597	6647	31	6597	6647	62	13344	13444
32	6802	6852	31	6597	6647	63	13549	13649
32	6802	6852	32	6802	6852	64	13754	13854

©Louvretec 2025 – All Rights Reserved. Technical specifications subject to change without notice.